June 215

SERVICE MANUAL ADDENDUM

ID–51A ID–51E

NOTE: Use these amended pages as one addendum set.
Do not mix them up with the previous master pages.

CONTENTS

REPLACEMENT PAGES . . . . . 7 - 1 and 7 - 2

AMENDED PAGES:
PARTS LIST 1
BOARD LAYOUTS (MAIN UNIT: B-7721G) 14
VOLTAGE DIAGRAM 16

[VERSION LIST]

MODEL	VERSION NUMBER	VERSION
ID-51E	#02	EUR
	#03	UK
	#04	ITR
ID-51A	#05	USA
	#06	KOR
	#07	EXP
	#08	EXP-01
ID-51E	#09	CHN*
ID-51A	#10	AUS*
ID-51E	#12	EUR-01*
ID-51A	#15	USA-01*
ID-51E	#22	EUR-02*
ID-51A	#25	USA-02*
ID-51E	#32	EUR-03*
ID-51A	#35	USA-03*
ID-51E	#42	EUR-04*
ID-51A	#45	USA-04*
ID-51E	#52	EUR-05*
ID-51A	#55	USA-05*
ID-51E	#62	EUR-06*
	#63	UK-06*
ID-51A	#65	USA-06*
ID-51E	#69	CHN-06*

*Newly added version.

SECTION 7 MECHANICAL PARTS

[CHASSIS PARTS]

REF NO.	ORDER NO.	DESCRIPTION	QTY.
J1	6910015630	2682 ANT CONNECTOR <EIK>	1
SP1	2510001890	C28N09M-1 <NIK>	1
W1	8910000460	FFC-1050 (FT12-10N050XXA)<VKHK>	1
EP1	6910025280	GPS-118B-080	1
MP1	8010022511	3390 CHASSIS-1	1
MP2	8210028210	3390 FRONT PANEL (A) ASSEMBLY *2 [EUR]	1
	8210028210	3390 FRONT PANEL (A) ASSEMBLY *2 [UK]	1
	8210028210	3390 FRONT PANEL (A) ASSEMBLY *2 [ITR]	1
	8210028200	3390 FRONT PANEL ASSEMBLY *1 [USA]	1
	8210028200	3390 FRONT PANEL ASSEMBLY *1 [KOR]	1
	8210028200	3390 FRONT PANEL ASSEMBLY *1 [EXP]	1
	8210028200	3390 FRONT PANEL ASSEMBLY *1 [EXP-01]	1
	8210028200	3390 FRONT PANEL ASSEMBLY *1 [CHN]	1
	8210028200	3390 FRONT PANEL ASSEMBLY *1 [AUS]	1
	8210030400	3390 FRONT PANEL (B) ASSEMBLY (Black) [EUR-01]	1
	8210030400	3390 FRONT PANEL (B) ASSEMBLY (Black) [USA-01]	1
	8210030440	3390 FRONT PANEL (F) ASSEMBLY (White) [EUR-02]	1
	8210030440	3390 FRONT PANEL (F) ASSEMBLY (White) [USA-02]	1
	8210030420	3390 FRONT PANEL (D) ASSEMBLY (Blue) [EUR-03]	1
	8210030420	3390 FRONT PANEL (D) ASSEMBLY (Blue) [USA-03]	1
	8210030430	3390 FRONT PANEL (E) ASSEMBLY (Green) [EUR-04]	1
	8210030430	3390 FRONT PANEL (E) ASSEMBLY (Green) [USA-04]	1
	8210030410	3390 FRONT PANEL (C) ASSEMBLY (Red) [EUR-05]	1
	8210030410	3390 FRONT PANEL (C) ASSEMBLY (Red) [USA-05]	1
	8210028211	3390 FRONT PANEL (A) ASSEMBLY-1 [EUR-06]	1
	8210028211	3390 FRONT PANEL (A) ASSEMBLY-1 [UK-06]	1
	8210028201	3390 FRONT PANEL ASSEMBLY-1 [USA-06]	1
	8210028201	3390 FRONT PANEL ASSEMBLY-1 [CHN-06]	1
MP3	8210028020	3390 REAR PANEL	1
MP6	8310080730	3390 WINDOW PLATE [EUR]	1
	8310080730	3390 WINDOW PLATE [UK]	1
	8310080730	3390 WINDOW PLATE [ITR]	1
	8310080730	3390 WINDOW PLATE [USA]	1
	8310080730	3390 WINDOW PLATE [KOR]	1
	8310080730	3390 WINDOW PLATE [EXP]	1
	8310080730	3390 WINDOW PLATE [EXP-01]	1
	8310080730	3390 WINDOW PLATE [CHN]	1
	8310080730	3390 WINDOW PLATE [AUS]	1
	8310085830	3390 WINDOW PLATE (B) [EUR-01]	1
	8310085830	3390 WINDOW PLATE (B) [USA-01]	1
	8310080730	3390 WINDOW PLATE [EUR-02]	1
	8310080730	3390 WINDOW PLATE [USA-02]	1
	8310080730	3390 WINDOW PLATE [EUR-03]	1
	8310080730	3390 WINDOW PLATE [USA-03]	1
	8310080730	3390 WINDOW PLATE [EUR-04]	1
	8310080730	3390 WINDOW PLATE [USA-04]	1
	8310080730	3390 WINDOW PLATE [EUR-05]	1
	8310080730	3390 WINDOW PLATE [USA-05]	1
	8310080730	3390 WINDOW PLATE [EUR-06]	1
	8310080730	3390 WINDOW PLATE [UK-06]	1
	8310080730	3390 WINDOW PLATE [USA-06]	1
	8310080730	3390 WINDOW PLATE [CHN-06]	1
MP7	8210028040	3390 REFLECTOR	1
MP8	8930085930	3390 MAIN SEAL TOT	1
MP12	8930068980	2905 VENT SHEET	1
MP13	8930030920	1301 SHEET	1
MP14	8930058550	O-RING (AS)	1
MP15	8930084870	3384 REAR SHEET	1
MP19	8610014360	KNOB N-397	1
MP20	8610014370	KNOB N-398	1
MP21	8930083090	3322 D-BUTTON	1
MP22	8930083070	3322 LENS	1
MP23	8930083140	3322 CONTACT RUBBER (TOT)	1
MP24	8930083881	O-RING (CK)-1 (TOT)	1
MP25	8930083670	O-RING (CL) (TOT)	1
MP26	8930083680	O-RING (CM) (TOT)	1
MP27	8830003672	VR NUT (AC)-2	1
MP28	8830003660	STEP NUT (M)	1
MP29	8930083700	DOUBLE SIDE TAPE (BM)	1
MP30	8930086950	SPONGE (MD)	1
MP31	8930083810	SPONGE (LJ)	1
MP32	8930083900	INSULATION SHEET (MW)	1
MP33	8930083690	3322 GPS SPONGE	1
MP34	8810010850	PHBT B0 M2X8 SUS SSBC	2
MP35	8810011050	BT M2X3 NI-ZC3	11
MP36	8810011050	BT M2X3 NI-ZC3	6
MP38	8930086021	3322 C-BUTTON (A)-1	1
MP39	8930086030	3390 SD CAP (TOT)	1
MP40	8930086041	3390 JACK CAP-1 (TOT)	1
MP41	8930086050	3322 KEYBOARD (A) (SC)	1

[CHASSIS PARTS]

REF NO.	ORDER NO.	DESCRIPTION	QTY.
MP42	8510020580	3390 SHIELD PLATE <KN>	1
MP43	8510020600	3390 DSP CASE <KN>	1
MP44	8930086060	3390 WINDOW SHEET	1
MP45	8930086070	3390 WHITE SHEET	1
MP46	8930086090	DOUBLE SIDE TAPE (BP)	1
MP47	8930086080	3390 MIC SPONGE	1
MP48	8930087760	FERRITE SHEET (AJ)	1
MP49	8930087770	FERRITE SHEET (AK)	1
MP50	8930087220	3390 INSULATION SHEET	1
MP51	8930085100	SHIELD SPONGE (CW) *1	1
MP52	8930075180	FERRITE SHEET (X)	1
MP53	8930087760	FERRITE SHEET (AJ)	1
MP54	8930088010	3390 LCD PLATE Y1297	1
MP55	8930058500	INSULATION SHEETHB	1
MP56	8930086090	DOUBLE SIDE TAPE (BP)	1
MP57	8930086090	DOUBLE SIDE TAPE (BP)	1
MP59	8930088200	3390 EARTH PLATE [EUR]	1
	8930088200	3390 EARTH PLATE [UK]	1
	8930088200	3390 EARTH PLATE [ITR]	1
	8930088200	3390 EARTH PLATE [USA]	1
	8930088200	3390 EARTH PLATE [CHN]	1
	8930088200	3390 EARTH PLATE [EUR-01]	1
	8930088200	3390 EARTH PLATE [USA-01]	1
	8930088200	3390 EARTH PLATE [EUR-02]	1
	8930088200	3390 EARTH PLATE [USA-02]	1
	8930088200	3390 EARTH PLATE [EUR-03]	1
	8930088200	3390 EARTH PLATE [USA-03]	1
	8930088200	3390 EARTH PLATE [EUR-04]	1
	8930088200	3390 EARTH PLATE [USA-04]	1
	8930088200	3390 EARTH PLATE [EUR-05]	1
	8930088200	3390 EARTH PLATE [USA-05]	1
	8930088200	3390 EARTH PLATE [EUR-06]	1
	8930088200	3390 EARTH PLATE [UK-06]	1
	8930088200	3390 EARTH PLATE [USA-06]	1
	8930088200	3390 EARTH PLATE [CHN-06]	1
MP60	8930088240	INSULATION SHEET (NC) [EUR]	1
	8930088240	INSULATION SHEET (NC) [UK]	1
	8930088240	INSULATION SHEET (NC) [ITR]	1
	8930088240	INSULATION SHEET (NC) [USA]	1
	8930088240	INSULATION SHEET (NC) [CHN]	1
	8930088240	INSULATION SHEET (NC) [EUR-01]	1
	8930088240	INSULATION SHEET (NC) [USA-01]	1
	8930088240	INSULATION SHEET (NC) [EUR-02]	1
	8930088240	INSULATION SHEET (NC) [USA-02]	1
	8930088240	INSULATION SHEET (NC) [EUR-03]	1
	8930088240	INSULATION SHEET (NC) [USA-03]	1
	8930088240	INSULATION SHEET (NC) [EUR-04]	1
	8930088240	INSULATION SHEET (NC) [USA-04]	1
	8930088240	INSULATION SHEET (NC) [EUR-05]	1
	8930088240	INSULATION SHEET (NC) [USA-05]	1
	8930088240	INSULATION SHEET (NC) [EUR-06]	1
	8930088240	INSULATION SHEET (NC) [UK-06]	1
	8930088240	INSULATION SHEET (NC) [USA-06]	1
	8930088240	INSULATION SHEET (NC) [CHN-06]	1
MP61	8930052470	INSULATION SHEETGE	1

[MAIN UNIT]

REF NO.	ORDER NO.	DESCRIPTION	QTY.
J2	6450000870	HEC2711-01-020	1
J3*	6510028130	AXK5S50047YG	1
J4	6510025880	TC38-108-01 <CFE>	1
J5	6450000131	HSJ1102-018540	1
J450*	6510029520	AXK5F12347YG	1
J451*	6510029520	AXK5F12347YG	1
S2	2260001900	SW-149 (SKHLLDA010)	1
W1	8920000570	CAB-1064 (UL3302AWG32 R)	1
W2	8920000570	CAB-1064 (UL3302AWG32 R)	1
MP1	8950007850	3322 CONTACT SPRING <CCP>	1
MP8*	8410002610	2888 PA HEATSINK Y835	1
MP9*	8510017841	OG-321610GK	1
MP10*	8510017841	OG-321610GK	1
MP11*	8510017841	OG-321610GK	1
MP12*	8510017841	OG-321610GK	1
MP13*	8510017841	OG-321610GK	1

*: Refer to "**BOARD LAYOUTS**" for the location.
: Refer to "GENERAL WIRING**" for the connection
Screw abbreviations A, B0, BT: Self-tapping PH: Pan head ZK: Black NI-ZU: Nickel-Zinc SUS: Stainless

[VCO1 UNIT]

REF NO.	ORDER NO.	DESCRIPTION	QTY.
J1*	6510029530	AXK6F12347YG	1
MP1	8510020590	3390 VCO CASE <KN>	1

[VCO2 UNIT]

REF NO.	ORDER NO.	DESCRIPTION	QTY.
J1*	6510029530	AXK6F12347YG	1
MP1	8510020590	3390 VCO CASE <KN>	1

[LOGIC UNIT]

REF NO.	ORDER NO.	DESCRIPTION	QTY.
J2*	6510028080	27FHSY-RSM1-GAN-TB (LF) (SN)	1
J3*	6510028170	SDHL-8BNS-K-363-A0-ETB (HF)	1
J4*	6510024580	HSJ1621-019011	1
J5*	6510028920	AXK6S50647YG	1
J271*	6510028880	04-6238-010-410-800+	1
DS13	5030003660	M1-1677TFF-4 <TES>	1
MC1	7700003080	F6022AP-SD <TDS>	1
S1*	2260003300	EVQPQHB55	1
S2*	2260003300	EVQPQHB55	1
S3*	2260003300	EVQPQHB55	1
S4*	2260003300	EVQPQHB55	1
S5*	2260003300	EVQPQHB55	1
S6*	2260003300	EVQPQHB55	1
S7*	2260003300	EVQPQHB55	1
S8*	2260003300	EVQPQHB55	1
S9*	2260003300	EVQPQHB55	1
S10*	2260003300	EVQPQHB55	1
S11*	2260003300	EVQPQHB55	1
S12	2250000710	F082EN7510W-1+C L20FX6 <SLVJ>	1
S13*	2260003320	SKRTLAE010	1
S14*	2260003320	SKRTLAE010	1
BT1*	3020000390	ML414HIV01E	1

[ACCESSORIES]

REF NO.	ORDER NO.	DESCRIPTION	QTY.
EP1	6910018620	BLACK HANDY STRAP <TOM>	1
EP2	3310002150	FA-S270C (146/440)	1
EP3	(Option)	BC-167SD [EUR]	1
	(Option)	BC-167SD [ITR]	1
	(Option)	BC-167SA [USA]	1
	(Option)	BC-167SD [KOR]	1
	(Option)	BC-167SA [EXP]	1
	(Option)	BC-167SD [EXP-01]	1
	(Option)	BC-167SC [CHN]	1
	(Option)	BC-167SV [AUS]	1
	(Option)	BC-167SD [EUR-01]	1
	(Option)	BC-167SA [USA-01]	1
	(Option)	BC-167SD [EUR-02]	1
	(Option)	BC-167SA [USA-02]	1
	(Option)	BC-167SD [EUR-03]	1
	(Option)	BC-167SA [USA-03]	1
	(Option)	BC-167SD [EUR-04]	1
	(Option)	BC-167SA [USA-04]	1
	(Option)	BC-167SD [EUR-05]	1
	(Option)	BC-167SA [USA-05]	1
	(Option)	BC-167SD [EUR-06]	1
	(Option)	BC-167SA [USA-06]	1
	(Option)	BC-167SC [CHN-06]	1
EP4	(Option)	BP-271	1
EP5	(Option)	FA-S270E [EUR-01]	1
	(Option)	FA-S270E [USA-01]	1
	(Option)	FA-S270E [EUR-02]	1
	(Option)	FA-S270E [USA-02]	1
	(Option)	FA-S270E [EUR-03]	1
	(Option)	FA-S270E [USA-03]	1
	(Option)	FA-S270E [EUR-04]	1
	(Option)	FA-S270E [USA-04]	1
	(Option)	FA-S270E [EUR-05]	1
	(Option)	FA-S270E [USA-05]	1
MP1	8010022171	MB-127	1

PARTS LIST

[MAIN UNIT]

REF NO.	PARTS NO.	DESCRIPTION		M.	H/V LOCATION
IC1	1110007860	S.IC	S-80950CLPF-G7LTFG *0	T	29.9/23.1
IC2	1110007610	S.IC	TPA0211DGNR	B	89.2/30.7
IC3	1180004210	S.REG	XC6221A402NR-G	T	49.3/20.6
IC4	6910022360	S.DC	TPS62110RSAR	B	84.0/12.7
IC5	1110006380	S.IC	LM2904PWR	T	21.7/15.3
IC6	1130011671	S.IC	MB15E03SLPFV1-G-ER-6E1	T	53.4/33.3
IC8	1190003490	S.IC	BQ24113	B	61.1/43.0
IC11	1110007550	S.IC	R2A20178NP	B	74.3/27.4
IC12	1110002751	S.IC	TA75S01F(TE85RF)	T	14.7/42.8
IC13	1110007320	S.IC	NJM2591V-TE1-#ZZZB	B	67.4/33.7
IC14	1110006380	S.IC	LM2904PWR	T	15.7/36.6
IC15	1180003460	S.REG	NJM2831F05-TE1-#ZZZB	T	51.9/47.1
IC16	1110006490	S.IC	LMV321IDCKR	B	77.2/38.1
IC17	1180003920	S.REG	XC6222D421MR-G	T	88.8/32.0
IC18	1130009981	S.IC	TC7W53FK(TE85LF)	B	75.3/20.3
IC20	1110006490	S.IC	LMV321IDCKR	B	82.8/28.4
IC441	1110008020	S.IC	SI4730-D60-GMR <MAC>	B	83.1/35.7
IC450	1130011671	S.IC	MB15E03SLPFV1-G-ER-6E1	T	45.7/14.8
IC901	1110007320	S.IC	NJM2591V-TE1-#ZZZB	B	72.8/11.0
IC952	1130016460	S.IC	R2A20169SA	T	33.9/12.8
IC953	1130011760	S.IC	CD4094BPWR	B	69.1/22.0
IC955	1110006490	S.IC	LMV321IDCKR	B	77.2/35.4
Q1	1590004100	S.TRA	LDTC144TET1G <SLVJ>	T	31.7/25.4
Q2	1550000240	S.FET	TPCF8107(TE85LF)	T	24.9/21.7
Q3	1590004100	S.TRA	LDTC144TET1G <SLVJ>	T	33.6/22.9
Q8	1550000240	S.FET	TPCF8107(TE85LF)	T	23.1/25.0
Q10	1590004050	S.TRA	LDTA144EET1G <SLVJ>	T	66.6/41.4
Q11	1590004070	S.TRA	LDTC144EET1G <SLVJ>	T	68.9/41.0
Q12	1530003990	S.TRA	2SC4738-BL(TE85LF)	T	53.0/26.9
Q17	1510001100	S.TRA	2SA1832-GR(TE85RF)	T	24.2/12.5
Q19	1590004070	S.TRA	LDTC144EET1G <SLVJ>	T	27.4/12.0
Q20	1560001730	S.FET	RUE002N02 TL	B	86.2/28.9
Q26	1560000541	S.FET	2SK880-Y(T5RICOMF)	T	53.8/40.8
Q36	1590004300	S.TRA	DRA9114T0L	B	64.3/26.7
Q37	1510001100	S.TRA	2SA1832-GR(TE85RF)	T	37.8/23.5
Q38	1530003990	S.TRA	2SC4738-BL(TE85LF)	T	63.9/30.6
Q39	1530004320	S.TRA	MT3S19TU(TE85L) *0	B	18.7/40.4
Q40	1530003990	S.TRA	2SC4738-BL(TE85LF)	B	61.2/28.0
Q41	1560001710	S.FET	RFM01U7P(TE12LF)	B	10.0/38.3
Q43	1590004070	S.TRA	LDTC144EET1G <SLVJ>	B	19.1/28.7
Q44	1530002921	S.TRA	2SC4226-T1 Y25 (R25)	B	57.7/35.9
Q45	1560001720	S.FET	RFM12U7X(T2LICOMQ)	T	8.0/30.0
Q48	1530003260	S.TRA	2SC5006-T1	T	34.9/28.5
Q49	1530003990	S.TRA	2SC4738-BL(TE85LF)	B	53.1/28.4
Q50	1530003990	S.TRA	2SC4738-BL(TE85LF)	B	57.8/28.4
Q51	1530003990	S.TRA	2SC4738-BL(TE85LF)	T	28.4/28.6
Q451	1560000541	S.FET	2SK880-Y(T5RICOMF)	T	45.2/7.4
Q470	1590004610	S.TRA	DMA561050R	T	44.0/20.2
Q471	1590004610	S.TRA	DMA561050R	T	46.0/28.2
Q472	1590005110	S.FET	QS6J11TR	T	49.7/28.6
Q501	1590004330	S.TRA	DRC9114E0L	T	12.0/9.8
Q502	1590004330	S.TRA	DRC9114E0L	T	14.9/9.9
Q503	1590004510	S.TRA	DMA561040R	T	13.1/12.4
Q504	1590004150	S.TRA	DRC9114T0L	B	10.0/15.2
Q601	1580000830	S.FET	BB506CFS-TL-E *1	B	41.2/19.5
Q602	1580000830	S.FET	BB506CFS-TL-E *1	B	27.9/5.2
Q641	1580000830	S.FET	BB506CFS-TL-E *1	B	46.9/7.5
Q701	1580000830	S.FET	BB506CFS-TL-E *1	B	36.7/18.8
Q702	1580000830	S.FET	BB506CFS-TL-E *1	B	21.3/11.6
Q740	1580000830	S.FET	BB506CFS-TL-E *1	B	46.5/15.1
Q780	1530003260	S.TRA	2SC5006-T1	T	24.3/9.9
Q801	1580000830	S.FET	BB506CFS-TL-E *1	B	46.9/26.4
Q811	1580000830	S.FET	BB506CFS-TL-E *1	B	54.2/11.4
Q820	1580000830	S.FET	BB506CFS-TL-E *1	B	39.9/29.2
Q830	1580000830	S.FET	BB506CFS-TL-E *1	B	57.9/17.7
Q850	1590004610	S.TRA	DMA561050R	B	64.9/17.5
Q851	1590004610	S.TRA	DMA561050R	B	64.0/20.3
Q852	1590004610	S.TRA	DMA561050R	B	64.0/14.7
Q853	1510001100	S.TRA	2SA1832-GR(TE85RF)	T	83.4/20.6
Q854	1590004300	S.TRA	DRA9114T0L	T	21.0/8.2
Q900	1530003260	S.TRA	2SC5006-T1	T	60.7/10.5
Q901	1530002921	S.TRA	2SC4226-T1 Y25 (R25)	B	66.7/9.8
Q902	1590004300	S.TRA	DRA9114T0L	T	85.4/13.5
Q903	1590004590	S.TRA	DMC506010R	T	82.1/15.2
Q904	1590004590	S.TRA	DMC506010R	T	79.3/11.4
Q906	1560001730	S.FET	RUE002N02 TL	T	25.3/3.2
Q907	1560001730	S.FET	RUE002N02 TL	T	25.3/5.2
Q908	1530003990	S.TRA	2SC4738-BL(TE85LF)	T	17.8/10.0
D1	1750002170	S.DIO	DB2S31400L	T	29.6/21.3
D3	1750001810	S.DIO	L1SS400T1G <SLVJ>	T	62.7/42.2
D4	1750001690	S.DIO	RB050LA-40	T	65.7/44.2
D9	1730002890	S.ZEN	DZ2J033M0L	T	26.2/15.8
D14	1750001910	S.DIO	HVD144AKRF-E	T	39.0/31.1
D15	1750001910	S.DIO	HVD144AKRF-E	B	67.3/28.0
D16	1750001910	S.DIO	HVD144AKRF-E	B	68.3/28.0
D17	1750001810	S.DIO	L1SS400T1G <SLVJ>	T	35.6/19.4
D18	1750001910	S.DIO	HVD144AKRF-E	T	69.2/34.6
D19	1750001910	S.DIO	HVD144AKRF-E	T	70.2/34.6
D20	1750002290	S.DIO	RKP300KJ	T	23.9/31.0
D21	1750002290	S.DIO	RKP300KJ	T	22.4/34.8
D22	1750001820	S.DIO	LRB706F-40T1G <SLVJ>	B	60.3/36.0
D23	1750001820	S.DIO	LRB706F-40T1G <SLVJ>	B	55.0/35.9
D34	1750002020	S.DIO	DA2S10100L	B	55.7/27.3
D37	1790001830	S.VAR	AVR-M1005C270MTAAB	T	17.2/23.9

[MAIN UNIT]

REF NO.	PARTS NO.	DESCRIPTION		M.	H/V LOCATION
D501	1750000581	S.DIO	1SV307(TPH3F)	B	13.5/19.9
D502	1750002580	S.DIO	HVU187TRF-E	B	10.4/19.9
D503	1750001910	S.DIO	HVD144AKRF-E	T	5.9/22.1
D504	1750001910	S.DIO	HVD144AKRF-E	T	4.8/22.1
D505	1750001820	S.DIO	LRB706F-40T1G <SLVJ>	B	8.9/22.4
D506	1750001910	S.DIO	HVD144AKRF-E	B	11.0/23.4
D508	1750001910	S.DIO	HVD144AKRF-E	B	17.3/12.9
D509	1750001820	S.DIO	LRB706F-40T1G <SLVJ>	B	6.3/21.5
D510	1750001910	S.DIO	HVD144AKRF-E	B	17.3/11.8
D511	1750002580	S.DIO	HVU187TRF-E	B	10.0/13.2
D512	1750001820	S.DIO	LRB706F-40T1G <SLVJ>	B	2.0/18.8
D513	1750001820	S.DIO	LRB706F-40T1G <SLVJ>	B	5.6/19.0
D602	1750000771	S.VAR	HVC376BTRF-E	B	49.7/22.9
D603	1750000771	S.VAR	HVC376BTRF-E	B	46.0/22.0
D604	1750002020	S.DIO	DA2S10100L	B	40.4/15.0
D605	1750000721	S.VAR	HVC375BTRF-E	B	41.9/11.3
D606	1750000721	S.VAR	HVC375BTRF-E	B	37.5/11.3
D642	1750000771	S.VAR	HVC376BTRF-E	B	53.0/7.9
D643	1750000771	S.VAR	HVC376BTRF-E	B	50.1/7.8
D644	1750002020	S.DIO	DA2S10100L	B	46.6/12.1
D645	1750000721	S.VAR	HVC375BTRF-E	B	42.8/5.6
D646	1750000721	S.VAR	HVC375BTRF-E	B	39.6/5.6
D702	1750000771	S.VAR	HVC376BTRF-E	B	36.7/27.2
D703	1750000771	S.VAR	HVC376BTRF-E	B	36.6/24.3
D704	1750002020	S.DIO	DA2S10100L	B	36.2/13.9
D705	1750000771	S.VAR	HVC376BTRF-E	B	32.3/12.2
D741	1750000771	S.VAR	HVC376BTRF-E	B	52.8/20.2
D742	1750000771	S.VAR	HVC376BTRF-E	B	50.0/18.5
D743	1750002020	S.DIO	DA2S10100L	B	44.8/12.5
D744	1750000771	S.VAR	HVC376BTRF-E	B	35.8/9.3
D745	1750001910	S.DIO	HVD144AKRF-E	T	28.8/9.0
D781	1750001910	S.DIO	HVD144AKRF-E	B	15.7/21.2
D782	1750001910	S.DIO	HVD144AKRF-E	T	18.2/22.4
D783	1750001910	S.DIO	HVD144AKRF-E	T	31.2/34.6
D801	1750001910	S.DIO	HVD144AKRF-E	B	43.9/32.7
D802	1750001910	S.DIO	HVD144AKRF-E	T	43.4/28.3
D811	1750001910	S.DIO	HVD144AKRF-E	B	57.9/15.5
D812	1750001910	S.DIO	HVD144AKRF-E	T	56.2/18.2
D820	1750001910	S.DIO	HVD144AKRF-E	B	41.1/35.1
D821	1750001910	S.DIO	HVD144AKRF-E	T	42.3/28.3
D830	1750001910	S.DIO	HVD144AKRF-E	B	59.7/16.1
D831	1750001910	S.DIO	HVD144AKRF-E	T	56.9/19.8
D880	1750001820	S.DIO	LRB706F-40T1G <SLVJ>	B	64.9/5.5
D901	1750002020	S.DIO	DA2S10100L	B	66.8/5.7
D903	1750001910	S.DIO	HVD144AKRF-E	B	12.1/23.4
D904	1750001820	S.DIO	LRB706F-40T1G <SLVJ>	T	32.3/6.0
D905	1750001820	S.DIO	LRB706F-40T1G <SLVJ>	T	31.9/1.9
D906	1790001950	S.VAR	VC060318A400RP	B	65.7/44.9
D908	1750001910	S.DIO	HVD144AKRF-E	T	29.0/6.7
D909	1790001950	S.VAR	VC060318A400RP	B	49.4/44.4
FI1	2020002180	S.CER	CFWKA450KHFA-R0	T	69.0/25.7
FI2	2020002480	S.CER	LTWC450E1 <JJE>	T	78.0/25.7
FI3	2030000860	S.MON	XDCAB 46.350 MHz (FL-439)	B	49.5/33.7
FI880	2030000720	S.MON	XDCAB 61.650 MHz (FL-429)	B	59.9/8.8
FI900	2020002480	S.CER	LTWC450E1 <JJE>	T	71.6/15.2
X1	6050012830	S.XTA	CR-875 XTCLK 15.300 MHz*R	T	63.0/16.4
X2	6070000310	S.DIS	JTBM450CX70 <JJE>	T	64.8/35.0
X900	6070000310	S.DIS	JTBM450CX70 <JJE>	T	69.0/7.5
L1	6200014270	S.COI	LQM2HPN2R2MJ0L	B	80.3/10.3
L2	6200014470	S.COI	LQH44PN100MP0L	B	87.3/18.3
L3	6200014270	S.COI	LQM2HPN2R2MJ0L	B	83.2/21.2
L6	6200014470	S.COI	LQH44PN100MP0L	B	54.4/43.2
L11	6200003960	S.COI	MLF1608A 1R0K-T	T	63.5/28.2
L12	6200003540	S.COI	MLF1608D R22K-T	T	61.6/31.1
L13	6200004480	S.COI	MLF1608D R82K-T	T	60.5/36.6
L14	6200011650	S.COI	LQW18AN68NG00D	B	16.3/39.8
L17	6200007740	S.COI	LQW2BHN47NJ03L	B	14.4/35.8
L19	6200005140	S.COI	MLF1608D R33K-T	B	59.3/33.9
L21	6200012800	S.COI	0.40-1.5-5TL 20N <COMO>	T	13.5/26.3
L41	6200006991	S.COI	ELJRE 56NGFA *0	T	33.1/28.5
L42	6200013860	S.COI	MLK1005S12NJT	T	10.1/34.5
L43	6200013850	S.COI	MLK1005S15NJT	T	12.5/33.6

Eqv.= This component is equivalent to the REF No. component listed above, and may be substituted on parts orders and repairs.

M.=Mounted side (T: Mounted on the Top side, B: Mounted on the Bottom side)
S.=Surface mount

[MAIN UNIT]

REF NO.	PARTS NO.	DESCRIPTION	M.	H/V LOCATION
L44	6200013970	S.COI MLK1005S1N5ST [EUR]	T	9.2/36.3
	6200013970	S.COI MLK1005S1N5ST [UK]		
	6200013970	S.COI MLK1005S1N5ST [ITR]		
	6200013980	S.COI MLK1005S1N2ST [USA]		
	6200013970	S.COI MLK1005S1N5ST [KOR]		
	6200013970	S.COI MLK1005S1N5ST [EXP]		
	6200013970	S.COI MLK1005S1N5ST [EXP-01]		
	6200013970	S.COI MLK1005S1N5ST [CHN]		
	6200013970	S.COI MLK1005S1N5ST [AUS]		
	6200013970	S.COI MLK1005S1N5ST [EUR-01]		
	6200013980	S.COI MLK1005S1N2ST [USA-01]		
	6200013970	S.COI MLK1005S1N5ST [EUR-02]		
	6200013980	S.COI MLK1005S1N2ST [USA-02]		
	6200013970	S.COI MLK1005S1N5ST [EUR-03]		
	6200013980	S.COI MLK1005S1N2ST [USA-03]		
	6200013970	S.COI MLK1005S1N5ST [EUR-04]		
	6200013980	S.COI MLK1005S1N2ST [USA-04]		
	6200013970	S.COI MLK1005S1N5ST [EUR-05]		
	6200013980	S.COI MLK1005S1N2ST [USA-05]		
	6200013970	S.COI MLK1005S1N5ST [EUR-06]		
	6200013970	S.COI MLK1005S1N5ST [UK-06]		
	6200013980	S.COI MLK1005S1N2ST [USA-06]		
	6200013970	S.COI MLK1005S1N5ST [CHN-06]		
L45	6200013840	S.COI MLK1005S18NJT	B	12.2/40.9
L402	6200006970	S.COI MLF1608A 3R9K-T	T	16.4/12.6
L403	6200006970	S.COI MLF1608A 3R9K-T	T	15.4/16.0
L501	6200013010	S.COI 0.30-0.9-5TL 10.3N <COMO>	T	4.1/24.9
L502	6200014200	S.COI 0.40-0.8-2TL 2.5J <COMO>	T	13.9/23.6
L503	6200013090	S.COI 0.26-1.1-5TR 16N <COMO>	T	14.3/21.3
L504	6200009250	S.COI LQW18ANR22G00D (LQW1608AR22G00)	T	13.5/18.8
L505	6200004480	S.COI MLF1608D R82K-T	T	7.8/22.7
L506	6200010910	S.COI LQW18AN56NG00D	T	7.8/21.5
L507	6200012540	S.COI 0.30-1.2-5TR 16.1N <COMO>	B	15.4/16.7
L508	6200009070	S.COI LQW18AN18NG00D (LQW1608A18NG00)	B	17.9/16.7
L511	6200012680	S.COI 0.30-1.3-5TL 20N <COMO>	B	14.2/14.1
L512	6200012980	S.COI 0.40-1.4-5TR 18.3N <COMO>	B	14.1/9.5
L513	6200013020	S.COI 0.25-1.9-7TL 61N <COMO>	T	4.6/19.1
L514	6200012730	S.COI 0.26-0.9-6TR 15.1N <COMO>	B	11.1/9.8
L515	6200012510	S.COI 0.25-1.9-8TL 72.0N <COMO>	T	8.9/18.0
L516	6200012910	S.COI 0.35-1.6-8TL 45.5N <COMO>	T	9.9/14.2
L602	6200010700	S.COI LQW18AN12NG00D	B	50.9/22.9
L603	6200009070	S.COI LQW18AN18NG00D (LQW1608A18NG00)	B	44.8/21.9
L604	6200011580	S.COI LQW18AN33NG00D	B	39.7/21.5
L605	6200011590	S.COI LQW18AN39NG00D	B	41.1/13.1
L606	6200011590	S.COI LQW18AN39NG00D	B	38.0/13.2
L607	6200011580	S.COI LQW18AN33NG00D	B	29.9/7.0
L608	6200011580	S.COI LQW18AN33NG00D	B	25.2/5.8
L610	6200011590	S.COI LQW18AN39NG00D	B	21.6/4.9
L612	6200011730	S.COI LQW18AN10NG00D(650MA)	B	19.7/6.9
L641	6200010700	S.COI LQW18AN12NG00D	B	54.3/8.1
L642	6200009070	S.COI LQW18AN18NG00D (LQW1608A18NG00)	B	48.8/5.8
L643	6200011580	S.COI LQW18AN33NG00D	B	49.1/10.1
L644	6200011590	S.COI LQW18AN39NG00D	B	41.3/7.4
L645	6200011590	S.COI LQW18AN39NG00D	B	38.1/7.3
L701	6200011770	S.COI LQW18ANR10G00D	B	36.1/28.4
L702	6200011770	S.COI LQW18ANR10G00D	B	36.8/21.2
L703	6200011670	S.COI LQW18AN82NG00D	B	34.3/13.1
L704	6200011860	S.COI LQW18ANR47G00D	B	23.3/10.0
L705	6200011660	S.COI LQW18ANR15G00D	B	19.2/22.3
L706	6200011660	S.COI LQW18ANR15G00D	B	18.7/20.5
L740	6200011770	S.COI LQW18ANR10G00D	B	54.0/18.6
L741	6200011770	S.COI LQW18ANR10G00D	B	47.3/17.8
L742	6200011670	S.COI LQW18AN82NG00D	B	41.7/9.6
L781	6200011650	S.COI LQW18AN68NG00D	T	19.0/16.8
L782	6200011590	S.COI LQW18AN39NG00D	T	18.3/18.6
L801	6200011220	S.COI C2012C-R47J-A	B	45.0/29.8
L802	6200009070	S.COI LQW18AN18NG00D (LQW1608A18NG00)	B	44.3/25.6
L803	6200013770	S.COI MLK1005S68NJT	B	45.1/24.2
L811	6200010340	S.COI C2012C-R33G-A	B	56.5/13.7
L813	6200013780	S.COI MLK1005S56NJT	B	52.3/15.0
L820	6200011220	S.COI C2012C-R47J-A	B	40.5/33.5
L821	6200009290	S.COI LQW18AN47NG00D (LQW1608A47NG00)	B	38.9/25.1
L830	6200010340	S.COI C2012C-R33G-A	B	60.4/19.5
L831	6200011660	S.COI LQW18ANR15G00D	B	55.6/22.5
L901	6200004790	S.COI MLF1608D R47K-T	T	62.4/9.2
L902	6200004790	S.COI MLF1608D R47K-T	T	64.2/6.6
L903	6200005140	S.COI MLF1608D R33K-T	B	68.7/8.1
L904	6200011660	S.COI LQW18ANR15G00D	B	19.3/26.1
L905	6200009531	S.COI ELJRE R15GFA *0	T	27.2/7.3
L906	6200009070	S.COI LQW18AN18NG00D (LQW1608A18NG00)	B	53.3/16.4
L907	6200010850	S.COI LQW18AN22NG00D (LQW1608A22NG00)	B	44.2/6.9
L908	6200010850	S.COI LQW18AN22NG00D (LQW1608A22NG00)	B	42.2/16.9
L909	6200011770	S.COI LQW18ANR10G00D	B	18.3/24.2
L910	6200014770	S.COI MLF2012C101K-T	T	20.1/5.5
L911	6200013530	S.COI MLF2012E 100K-T	T	18.8/2.4
L912	6200014770	S.COI MLF2012C101K-T	T	23.4/1.6
L913	6200013750	S.COI MLK1005SR10JT	T	18.8/13.5
R1	7030011870	S.RES ERJ2BSFR18X (0.18)	T	31.8/19.8
R4	7030011910	S.RES ERJ2GEJ 106 X (10M)	T	28.6/26.8
R5	7030012250	S.RES ERJ2RKD 1004X (1M)	T	32.1/18.6
R6	7030008310	S.RES ERJ2GEJ 564 X (560K)	T	33.0/18.6
R7	7030003860	S.RES ERJ3GE JPW V	B	37.0/39.0
R8	7030008270	S.RES RR0510P-104-D (100K)	B	13.0/6.8
R9	7030011910	S.RES ERJ2GEJ 106 X (10M)	T	30.2/26.9

[MAIN UNIT]

REF NO.	PARTS NO.	DESCRIPTION	M.	H/V LOCATION
R10	7030005000	S.RES ERJ2GEJ 471 X (470)	B	25.3/40.6
R11	7030007320	S.RES ERJ2GEJ 225 X (2.2M)	T	31.7/21.3
R12	7030011910	S.RES ERJ2GEJ 106 X (10M)	T	31.7/22.3
R13	7030011910	S.RES ERJ2GEJ 106 X (10M)	T	32.1/23.6
R14	7030003860	S.RES ERJ3GE JPW V	T	88.0/24.5
R17	7030005830	S.RES RR0510P-223-D (22K)	B	65.2/41.0
R18	7030007340	S.RES ERJ2GEJ 153 X (15K)	B	64.0/40.5
R19	7030005820	S.RES RR0510P-103-D (10K)	T	33.5/21.3
R21	7030005290	S.RES ERJ2GEJ 682 X (6.8K)	B	57.4/44.2
R22	7030005240	S.RES ERJ2GEJ 473 X (47K)	B	57.4/41.4
R25	7030010040	S.RES ERJ2GEJ-JPW	B	87.6/26.6
R26	7030008270	S.RES RR0510P-104-D (100K)	B	57.4/42.3
R28	7030011890	S.RES ERJ2BSFR10X (0.1)	B	50.9/40.5
R30	7030008270	S.RES RR0510P-104-D (100K)	B	89.1/27.2
R37	7030008310	S.RES ERJ2GEJ 564 X (560K)	T	64.3/13.1
R41	7030009280	S.RES ERJ2GEJ 391 X	T	54.8/28.4
R43	7030009190	S.RES RR0510P-332-D (3.3K)	B	86.9/32.4
R44	7030011870	S.RES ERJ2BSFR18X (0.18)	T	20.9/26.1
R45	7030011870	S.RES ERJ2BSFR18X (0.18)	T	20.9/25.2
R46	7030011870	S.RES ERJ2BSFR18X (0.18)	T	20.9/24.3
R47	7030005820	S.RES RR0510P-103-D (10K)	T	64.2/20.8
R48	7030012270	S.RES ERJ2RKD 1203X (120K)	T	20.4/22.9
R49	7030012250	S.RES ERJ2RKD 1004X (1M)	B	81.2/14.1
R53	7030012260	S.RES ERJ2RKD 4703X (470K)	T	22.5/19.8
R54	7030012250	S.RES ERJ2RKD 1004X (1M)	T	22.5/22.5
R55	7030005120	S.RES ERJ2GEJ 102 X (1K)	T	54.6/30.0
R57	7030010020	S.RES ERJ2RKF 1503X (150K)	B	80.6/20.1
R59	7030005820	S.RES RR0510P-103-D (10K)	T	24.0/16.5
R60	7030007320	S.RES ERJ2GEJ 225 X (2.2M)	T	48.1/31.9
R61	7030012270	S.RES ERJ2RKD 1203X (120K)	T	21.3/22.9
R62	7030008270	S.RES RR0510P-104-D (100K)	T	58.3/34.5
R63	7030010040	S.RES ERJ2GEJ-JPW	B	81.5/21.7
R64	7030012260	S.RES ERJ2RKD 4703X (470K)	B	80.6/21.7
R65	7030012250	S.RES ERJ2RKD 1004X (1M)	T	20.9/19.8
R67	7030005810	S.RES RR0510P-152-D (1.5K)	T	48.0/37.6
R69	7030012260	S.RES ERJ2RKD 4703X (470K)	T	20.9/21.6
R71	7030007570	S.RES ERJ2GEJ 122 X (1.2K)	T	47.6/38.8
R76	7030005240	S.RES ERJ2GEJ 473 X (47K)	T	25.9/11.0
R79	7030005240	S.RES ERJ2GEJ 473 X (47K)	T	25.8/12.5
R82	7030005000	S.RES ERJ2GEJ 471 X (470)	B	32.8/37.1
R90	7030007570	S.RES ERJ2GEJ 122 X (1.2K)	T	47.1/40.0
R93	7030007570	S.RES ERJ2GEJ 122 X (1.2K)	T	45.8/37.6
R103	7030005000	S.RES ERJ2GEJ 471 X (470)	T	53.5/38.5
R110	7030005290	S.RES ERJ2GEJ 682 X (6.8K)	T	56.1/40.2
R112	7030008270	S.RES RR0510P-104-D (100K)	T	51.4/41.2
R113	7030005210	S.RES ERJ2GEJ 822 X (8.2K)	T	54.7/39.0
R121	7030010040	S.RES ERJ2GEJ-JPW	T	28.4/30.2
R122	7030010040	S.RES ERJ2GEJ-JPW	T	27.0/29.7
R123	7030005290	S.RES ERJ2GEJ 682 X (6.8K)	T	27.0/28.1
R142	7030008270	S.RES RR0510P-104-D (100K)	B	74.6/23.8
R143	7030009190	S.RES RR0510P-332-D (3.3K)	B	78.2/28.2
R144	7030009190	S.RES RR0510P-332-D (3.3K)	B	78.5/29.3
R145	7030009190	S.RES RR0510P-332-D (3.3K)	B	78.2/26.7
R158	7030011000	S.RES RR0510P-392-D (3.9K)	T	37.6/28.5
R159	7030005810	S.RES RR0510P-152-D (1.5K)	T	38.9/33.0
R160	7030008010	S.RES ERJ2GEJ 123 X (12K)	B	67.4/29.9
R161	7030005820	S.RES RR0510P-103-D (10K)	B	66.0/27.3
R162	7030005820	S.RES RR0510P-103-D (10K)	B	68.3/25.9
R163	7030005120	S.RES ERJ2GEJ 102 X (1K)	T	37.3/19.9
R164	7030005240	S.RES ERJ2GEJ 473 X (47K)	T	37.4/21.5
R165	7030007060	S.RES ERJ2GEJ 684X (680K)	T	62.1/29.2
R166	7030004980	S.RES ERJ2GEJ 101 X (100)	T	60.9/29.7
R167	7030005820	S.RES RR0510P-103-D (10K)	T	69.6/33.1
R168	7030005820	S.RES RR0510P-103-D (10K)	T	71.2/33.1
R169	7030005220	S.RES ERJ2GEJ 223 X (22K)	T	15.4/45.1
R170	7030008010	S.RES ERJ2GEJ 123 X (12K)	B	69.0/37.0
R171	7030005060	S.RES ERJ2GEJ 333 X (33K)	T	17.2/43.2
R172	7030005100	S.RES ERJ2GEJ 154 X (150K)	B	69.7/30.4
R173	7030005120	S.RES ERJ2GEJ 102 X (1K)	B	71.1/29.8
R174	7030005120	S.RES ERJ2GEJ 102 X (1K)	T	25.2/29.0
R176	7030010130	S.RES ERJ2GEJ 6R8 X (6.8)	B	18.4/38.4
R177	7030010010	S.RES ERJ2RKF 334 X (330K)	T	12.5/44.7
R178	7030012250	S.RES ERJ2RKD 1004X (1M)	T	12.5/43.0
R179	7030005100	S.RES ERJ2GEJ 154 X (150K)	B	70.2/27.6
R180	7030005120	S.RES ERJ2GEJ 102 X (1K)	T	23.1/32.7
R181	7030005820	S.RES RR0510P-103-D (10K)	T	22.2/30.0
R182	7030005810	S.RES RR0510P-152-D (1.5K)	B	72.5/35.4
R183	7030005120	S.RES ERJ2GEJ 102 X (1K)	T	22.1/36.5
R184	7030005810	S.RES RR0510P-152-D (1.5K)	T	22.2/31.8
R185	7030009140	S.RES ERJ2GEJ 272 X (2.7K)	B	21.1/40.2
R186	7030005210	S.RES ERJ2GEJ 822 X (8.2K)	B	21.1/38.4
R187	7030004980	S.RES ERJ2GEJ 101 X (100)	T	21.0/32.1
R188	7030010010	S.RES ERJ2RKF 334 X (330K)	T	10.6/39.5
R189	7030005220	S.RES ERJ2GEJ 223 X (22K)	T	14.2/39.5
R191	7030012250	S.RES ERJ2RKD 1004X (1M)	T	10.5/37.9
R192	7030009280	S.RES ERJ2GEJ 391 X	B	12.8/42.8
R193	7030008270	S.RES RR0510P-104-D (100K)	B	62.6/33.7
R194	7030005060	S.RES ERJ2GEJ 333 X (33K)	T	12.4/39.5
R195	7030008400	S.RES ERJ2GEJ 182 X (1.8K)	B	65.3/29.8
R196	7030009190	S.RES RR0510P-332-D (3.3K)	B	62.8/29.1
R197	7030007250	S.RES ERJ2GEJ 220 X (22)	B	62.2/31.6
R198	7030008400	S.RES ERJ2GEJ 182 X (1.8K)	B	63.1/31.6
R199	7030005240	S.RES ERJ2GEJ 473 X (47K)	B	59.2/27.0
R200	7030004990	S.RES ERJ2GEJ 221 X (220)	B	13.7/37.3
R201	7030004970	S.RES ERJ2GEJ 470 X (47)	B	12.2/41.8
R202	7030005240	S.RES ERJ2GEJ 473 X (47K)	B	13.3/44.2
R203	7030008310	S.RES ERJ2GEJ 564 X (560K)	T	20.5/36.9
R204	7030005240	S.RES ERJ2GEJ 473 X (47K)	B	66.0/26.4
R205	7030009190	S.RES RR0510P-332-D (3.3K)	T	9.6/37.9
R206	7030007340	S.RES ERJ2GEJ 153 X (15K)	T	19.3/34.0
R207	7030007340	S.RES ERJ2GEJ 153 X (15K)	B	18.5/31.7
R209	7030005590	S.RES ERJ2GEJ 680 X (68)	B	62.5/36.8
R210	7030010040	S.RES ERJ2GEJ-JPW	T	9.2/35.4
R211	7030009160	S.RES ERJ2GEJ 181 X (180)	B	57.8/31.5
R212	7030005000	S.RES ERJ2GEJ 471 X (470)	B	60.7/33.0

Eqv.= This component is equivalent to the REF No. component listed above, and may be substituted on parts orders and repairs.

M.=Mounted side (T: Mounted on the Top side, B: Mounted on the Bottom side)
S.=Surface mount

[MAIN UNIT]

REF NO.	PARTS NO.	DESCRIPTION	M.	H/V LOCATION
R213	7030004980	S.RES ERJ2GEJ 101 X (100)	T	7.9/36.9
R214	7030005720	S.RES ERJ2GEJ 563 X (56K)	B	56.0/31.5
R215	7030004990	S.RES ERJ2GEJ 221 X (220)	T	20.1/32.1
R216	7030005820	S.RES RR0510P-103-D (10K)	T	18.4/34.0
R217	7030010430	S.RES ERJ2GEJ 120 X (12)	T	7.9/34.3
R218	7030007340	S.RES ERJ2GEJ 153 X (15K)	T	3.8/33.7
R222	7030004980	S.RES ERJ2GEJ 101 X (100)	B	44.1/33.7
R253	7030005600	S.RES ERJ2GEJ 273 X (27K)	T	35.7/26.7
R254	7030004970	S.RES ERJ2GEJ 470 X (47)	T	37.0/26.3
R255	7030007340	S.RES ERJ2GEJ 153 X (15K)	B	60.0/29.5
R256	7030005110	S.RES ERJ2GEJ 224 X (220K)	B	56.4/30.2
R257	7030005060	S.RES ERJ2GEJ 333 X (33K)	B	55.5/30.2
R258	7030008270	S.RES RR0510P-104-D (100K)	B	54.7/28.4
R259	7030005010	S.RES ERJ2GEJ 681 X (680)	B	53.8/26.5
R260	7030007340	S.RES ERJ2GEJ 153 X (15K)	B	56.1/33.0
R261	7030007340	S.RES ERJ2GEJ 153 X (15K)	B	57.3/30.2
R262	7030005010	S.RES ERJ2GEJ 681 X (680)	B	57.5/26.9
R263	7030011910	S.RES ERJ2GEJ 106 X (10M)	B	59.2/30.8
R268	7030007280	S.RES ERJ2GEJ 331 X (330)	B	54.4/34.1
R273	7030010010	S.RES ERJ2RKF 334 X (330K)	B	75.8/39.8
R274	7030010010	S.RES ERJ2RKF 334 X (330K)	B	77.2/40.2
R275	7030005240	S.RES ERJ2GEJ 473 X (47K)	T	20.5/34.2
R276	7030009190	S.RES RR0510P-332-D (3.3K)	B	83.3/30.2
R277	7030008270	S.RES RR0510P-104-D (100K)	B	82.3/26.6
R278	7030005720	S.RES ERJ2GEJ 563 X (56K)	B	80.9/26.9
R280	7030005810	S.RES RR0510P-152-D (1.5K)	B	84.5/30.7
R281	7030007280	S.RES ERJ2GEJ 331 X (330)	B	85.4/30.7
R401	7030005290	S.RES ERJ2GEJ 682 X (6.8K)	T	29.0/4.2
R403	7030005240	S.RES ERJ2GEJ 473 X (47K)	T	26.9/4.7
R404	7030005240	S.RES ERJ2GEJ 473 X (47K)	T	26.9/3.1
R441	7030008270	S.RES RR0510P-104-D (100K)	B	38.6/43.9
R442	7030005240	S.RES ERJ2GEJ 473 X (47K)	B	80.0/35.0
R444	7030005290	S.RES ERJ2GEJ 682 X (6.8K)	T	29.0/5.1
R450	7030005120	S.RES ERJ2GEJ 102 X (1K)	T	47.7/18.3
R451	7030007320	S.RES ERJ2GEJ 225 X (2.2M)	T	51.0/16.2
R452	7030005810	S.RES RR0510P-152-D (1.5K)	T	51.0/10.7
R454	7030007570	S.RES ERJ2GEJ 122 X (1.2K)	T	51.4/9.4
R455	7030007570	S.RES ERJ2GEJ 122 X (1.2K)	T	51.8/8.1
R457	7030007570	S.RES ERJ2GEJ 122 X (1.2K)	T	53.2/10.5
R458	7030008270	S.RES RR0510P-104-D (100K)	T	47.6/6.9
R459	7030005000	S.RES ERJ2GEJ 471 X (470)	T	45.6/9.6
R460	7030005210	S.RES ERJ2GEJ 822 X (8.2K)	T	44.4/9.1
R461	7030005290	S.RES ERJ2GEJ 682 X (6.8K)	T	43.0/7.9
R462	7030010040	S.RES ERJ2GEJ-JPW	B	79.1/34.6
R465	7030010040	S.RES ERJ2GEJ-JPW	B	80.1/29.2
R466	7030010040	S.RES ERJ2GEJ-JPW	T	87.8/36.5
R472	7030010040	S.RES ERJ2GEJ-JPW	T	45.7/2.5
R473	7030010040	S.RES ERJ2GEJ-JPW	T	51.4/2.5
R501	7510001770	S.THE NTCG10 4LH 473JT	B	8.1/24.3
R502	7030005120	S.RES ERJ2GEJ 102 X (1K)	T	14.1/15.5
R503	7030005820	S.RES RR0510P-103-D (10K)	B	9.7/24.3
R504	7030010040	S.RES ERJ2GEJ-JPW	T	12.9/16.4
R505	7030005120	S.RES ERJ2GEJ 102 X (1K)	T	11.6/17.3
R506	7030004980	S.RES ERJ2GEJ 101 X (100)	T	11.6/19.1
R507	7030007270	S.RES ERJ2GEJ 151 X (150)	B	10.3/16.7
R508	7030005060	S.RES ERJ2GEJ 333 X (33K)	B	3.9/24.3
R510	7030003340	S.RES ERJ3GEYJ 151 V (150)	B	18.6/14.7
R511	7030005240	S.RES ERJ2GEJ 473 X (47K)	B	3.9/22.5
R512	7030007270	S.RES ERJ2GEJ 151 X (150)	B	8.3/14.6
R513	7030005240	S.RES ERJ2GEJ 473 X (47K)	B	2.5/22.0
R514	7030005820	S.RES RR0510P-103-D (10K)	B	2.1/23.4
R515	7030005080	S.RES ERJ2GEJ 823 X (82K)	B	3.9/23.4
R516	7030005080	S.RES ERJ2GEJ 823 X (82K)	B	7.0/11.4
R602	7030005530	S.RES ERJ2GEJ 100 X (10)	B	39.3/16.4
R603	7030005240	S.RES ERJ2GEJ 473 X (47K)	B	48.6/21.5
R604	7030005240	S.RES ERJ2GEJ 473 X (47K)	B	47.3/21.0
R605	7030010040	S.RES ERJ2GEJ-JPW	B	43.0/20.1
R606	7030006010	S.RES RR0510P-472-D (4.7K)	B	39.2/23.4
R607	7030005220	S.RES ERJ2GEJ 223 X (22K)	B	41.1/16.4
R608	7030005220	S.RES ERJ2GEJ 223 X (22K)	B	40.2/16.4
R610	7030008300	S.RES ERJ2GEJ 184 X (180K)	B	40.8/17.7
R612	7030005240	S.RES ERJ2GEJ 473 X (47K)	B	40.0/12.7
R613	7030005240	S.RES ERJ2GEJ 473 X (47K)	B	39.1/12.7
R614	7030004980	S.RES ERJ2GEJ 101 X (100)	B	33.7/9.8
R615	7030004980	S.RES ERJ2GEJ 101 X (100)	B	33.9/7.2
R616	7030010040	S.RES ERJ2GEJ-JPW	B	31.8/7.3
R617	7030005530	S.RES ERJ2GEJ 100 X (10)	B	32.7/6.7
R618	7030010040	S.RES ERJ2GEJ-JPW	B	31.6/4.9
R619	7030005240	S.RES ERJ2GEJ 473 X (47K)	B	27.0/7.2
R621	7030005310	S.RES ERJ2GEJ 124 X (120K)	B	25.2/7.2
R642	7030005530	S.RES ERJ2GEJ 100 X (10)	B	50.2/11.7
R643	7030005240	S.RES ERJ2GEJ 473 X (47K)	B	51.7/5.8
R644	7030005240	S.RES ERJ2GEJ 473 X (47K)	B	50.8/5.8
R645	7030010040	S.RES ERJ2GEJ-JPW	B	46.6/5.7
R646	7030006010	S.RES RR0510P-472-D (4.7K)	B	51.1/10.1
R647	7030005220	S.RES ERJ2GEJ 223 X (22K)	B	47.8/11.0
R648	7030005220	S.RES ERJ2GEJ 223 X (22K)	B	46.2/11.0
R650	7030008300	S.RES ERJ2GEJ 184 X (180K)	B	45.0/8.2
R652	7030005240	S.RES ERJ2GEJ 473 X (47K)	B	40.2/6.9
R653	7030005240	S.RES ERJ2GEJ 473 X (47K)	B	39.3/6.9
R702	7030005530	S.RES ERJ2GEJ 100 X (10)	B	35.4/22.3
R703	7030005240	S.RES ERJ2GEJ 473 X (47K)	B	35.4/26.2
R704	7030005240	S.RES ERJ2GEJ 473 X (47K)	B	35.4/25.3
R705	7030008270	S.RES RR0510P-104-D (100K)	B	35.4/23.2
R707	7030005120	S.RES ERJ2GEJ 102 X (1K)	B	37.1/22.3
R708	7030005220	S.RES ERJ2GEJ 223 X (22K)	B	34.5/16.5
R709	7030005220	S.RES ERJ2GEJ 223 X (22K)	B	34.6/17.8
R711	7030008300	S.RES ERJ2GEJ 184 X (180K)	B	35.7/16.8
R713	7030005240	S.RES ERJ2GEJ 473 X (47K)	B	32.6/11.1
R714	7030007280	S.RES ERJ2GEJ 331 X (330)	B	28.1/10.8
R715	7030005530	S.RES ERJ2GEJ 100 X (10)	B	25.2/9.5
R716	7030010040	S.RES ERJ2GEJ-JPW	B	26.5/10.8
R717	7030010040	S.RES ERJ2GEJ-JPW	B	21.3/9.4
R718	7030005810	S.RES RR0510P-152-D (1.5K)	B	24.3/9.5
R719	7030005240	S.RES ERJ2GEJ 473 X (47K)	B	19.7/19.1

[MAIN UNIT]

REF NO.	PARTS NO.	DESCRIPTION	M.	H/V LOCATION
R721	7030005310	S.RES ERJ2GEJ 124 X (120K)	B	18.8/19.1
R725	7030005530	S.RES ERJ2GEJ 100 X (10)	B	37.4/16.2
R741	7030005530	S.RES ERJ2GEJ 100 X (10)	B	47.3/19.6
R742	7030005240	S.RES ERJ2GEJ 473 X (47K)	B	52.0/18.2
R743	7030005240	S.RES ERJ2GEJ 473 X (47K)	B	51.1/18.2
R744	7030008270	S.RES RR0510P-104-D (100K)	B	49.2/16.2
R745	7030005530	S.RES ERJ2GEJ 100 X (10)	B	48.8/15.0
R746	7030005120	S.RES ERJ2GEJ 102 X (1K)	B	46.3/18.0
R747	7030005220	S.RES ERJ2GEJ 223 X (22K)	B	43.8/17.2
R748	7030005220	S.RES ERJ2GEJ 223 X (22K)	B	44.2/16.0
R750	7030008300	S.RES ERJ2GEJ 184 X (180K)	B	44.2/15.1
R752	7030005240	S.RES ERJ2GEJ 473 X (47K)	B	37.2/9.4
R753	7030007280	S.RES ERJ2GEJ 331 X (330)	B	28.1/9.9
R754	7030005820	S.RES RR0510P-103-D (10K)	T	29.1/9.9
R770	7030010040	S.RES ERJ2GEJ-JPW	T	17.3/21.0
R780	7030004980	S.RES ERJ2GEJ 101 X (100)	T	21.5/9.9
R781	7030005060	S.RES ERJ2GEJ 333 X (33K)	T	22.7/9.9
R783	7030007290	S.RES ERJ2GEJ 222 X (2.2K)	T	18.5/20.6
R784	7030009190	S.RES RR0510P-332-D (3.3K)	T	16.4/20.9
R785	7030007290	S.RES ERJ2GEJ 222 X (2.2K)	B	16.6/20.9
R787	7030005240	S.RES ERJ2GEJ 473 X (47K)	T	32.6/33.7
R801	7030007250	S.RES ERJ2GEJ 220 X (22)	B	47.5/30.1
R802	7030008370	S.RES ERJ2GEJ 561 X (560)	B	44.3/31.5
R803	7030005080	S.RES ERJ2GEJ 823 X (82K)	B	47.3/24.6
R804	7030008270	S.RES RR0510P-104-D (100K)	B	48.6/25.1
R805	7030008270	S.RES RR0510P-104-D (100K)	B	43.9/24.2
R806	7030005120	S.RES ERJ2GEJ 102 X (1K)	B	47.3/23.7
R811	7030007250	S.RES ERJ2GEJ 220 X (22)	B	55.9/15.3
R812	7030008280	S.RES ERJ2GEJ 271 X (270)	B	56.4/11.2
R813	7030005080	S.RES ERJ2GEJ 823 X (82K)	B	51.4/13.4
R814	7030008270	S.RES RR0510P-104-D (100K)	B	52.3/11.7
R815	7030008270	S.RES RR0510P-104-D (100K)	B	51.4/11.7
R816	7030005120	S.RES ERJ2GEJ 102 X (1K)	B	52.3/13.4
R820	7030005210	S.RES ERJ2GEJ 822 X (8.2K)	B	43.2/35.5
R821	7030007250	S.RES ERJ2GEJ 220 X (22)	B	42.4/31.4
R822	7030008370	S.RES ERJ2GEJ 561 X (560)	B	39.6/31.0
R823	7030005080	S.RES ERJ2GEJ 823 X (82K)	B	40.6/27.3
R824	7030008270	S.RES RR0510P-104-D (100K)	B	42.2/28.2
R825	7030008270	S.RES RR0510P-104-D (100K)	B	38.2/28.8
R826	7030009140	S.RES ERJ2GEJ 272 X (2.7K)	B	42.2/27.3
R827	7030006010	S.RES RR0510P-472-D (4.7K)	T	43.8/30.0
R830	7030005210	S.RES ERJ2GEJ 822 X (8.2K)	B	60.6/14.5
R831	7030007250	S.RES ERJ2GEJ 220 X (22)	B	58.5/21.3
R832	7030008280	S.RES ERJ2GEJ 271 X (270)	B	60.9/17.4
R833	7030005080	S.RES ERJ2GEJ 823 X (82K)	B	55.3/19.6
R834	7030008270	S.RES RR0510P-104-D (100K)	B	55.9/18.2
R835	7030008270	S.RES RR0510P-104-D (100K)	B	54.6/20.5
R836	7030005120	S.RES ERJ2GEJ 102 X (1K)	B	56.9/21.3
R837	7030006010	S.RES RR0510P-472-D (4.7K)	T	55.6/19.1
R880	7030004990	S.RES ERJ2GEJ 221 X (220)	B	63.1/5.3
R881	7030007250	S.RES ERJ2GEJ 220 X (22)	B	59.0/13.6
R901	7030004980	S.RES ERJ2GEJ 101 X (100)	T	63.8/10.7
R902	7030007060	S.RES ERJ2GEJ 684X (680K)	T	62.5/11.2
R903	7030005100	S.RES ERJ2GEJ 154 X (150K)	B	74.4/15.3
R904	7030005120	S.RES ERJ2GEJ 102 X (1K)	B	71.9/17.0
R905	7030005100	S.RES ERJ2GEJ 154 X (150K)	B	71.9/17.9
R906	7030005810	S.RES RR0510P-152-D (1.5K)	B	69.5/13.2
R907	7030008270	S.RES RR0510P-104-D (100K)	B	72.7/6.1
R908	7030005120	S.RES ERJ2GEJ 102 X (1K)	B	75.4/6.1
R909	7030007250	S.RES ERJ2GEJ 220 X (22)	B	69.6/6.0
R910	7030005010	S.RES ERJ2GEJ 681 X (680)	T	73.7/9.9
R911	7030005590	S.RES ERJ2GEJ 680 X (68)	B	67.5/11.8
R912	7030009160	S.RES ERJ2GEJ 181 X (180)	B	68.7/6.0
R913	7030005000	S.RES ERJ2GEJ 471 X (470)	B	69.7/7.8
R914	7030007340	S.RES ERJ2GEJ 153 X (15K)	B	67.8/6.0
R915	7030005720	S.RES ERJ2GEJ 563 X (56K)	B	65.8/7.8
R917	7030008010	S.RES ERJ2GEJ 123 X (12K)	T	82.4/19.1
R918	7030004980	S.RES ERJ2GEJ 101 X (100)	T	85.4/15.4
R919	7030005060	S.RES ERJ2GEJ 333 X (33K)	T	82.4/18.2
R920	7030006010	S.RES RR0510P-472-D (4.7K)	T	82.4/17.3
R922	7030005170	S.RES ERJ2GEJ 474 X (470K)	T	78.5/7.9
R923	7030005600	S.RES ERJ2GEJ 273 X (27K)	T	80.8/17.3
R924	7030005120	S.RES ERJ2GEJ 102 X (1K)	T	83.5/12.2
R925	7030005240	S.RES ERJ2GEJ 473 X (47K)	T	81.4/12.6
R926	7030005810	S.RES RR0510P-152-D (1.5K)	T	82.3/11.0
R927	7030005100	S.RES ERJ2GEJ 154 X (150K)	T	78.8/9.7
R928	7030007340	S.RES ERJ2GEJ 153 X (15K)	T	77.1/9.8
R930	7030005720	S.RES ERJ2GEJ 563 X (56K)	T	83.5/13.2
R931	7030005720	S.RES ERJ2GEJ 563 X (56K)	T	80.3/14.3
R950	7030004970	S.RES ERJ2GEJ 470 X (47)	T	38.6/10.3
R951	7030007270	S.RES ERJ2GEJ 151 X (150)	T	25.5/8.7
R952	7030004990	S.RES ERJ2GEJ 221 X (220)	T	23.7/8.1
R954	7030010040	S.RES ERJ2GEJ-JPW	T	61.2/12.6
R955	7030008270	S.RES RR0510P-104-D (100K)	T	41.0/14.5
R956	7030008270	S.RES RR0510P-104-D (100K)	T	58.3/33.6
R959	7030004980	S.RES ERJ2GEJ 101 X (100)	T	23.2/4.2
R961	7030007290	S.RES ERJ2GEJ 222 X (2.2K)	B	30.9/7.3
R962	7030009290	S.RES ERJ2GEJ 562 X (5.6K)	T	85.1/20.3
R963	7030010130	S.RES ERJ2GEJ 6R8 X (6.8)	T	23.2/5.2
R968	7030005240	S.RES ERJ2GEJ 473 X (47K)	B	77.2/32.7
R973	7030005810	S.RES RR0510P-152-D (1.5K)	T	19.1/9.0
R974	7030007250	S.RES ERJ2GEJ 220 X (22)	T	16.4/10.4
R975	7030010010	S.RES ERJ2RKF 334 X (330K)	T	19.4/10.2
R976	7030010040	S.RES ERJ2GEJ-JPW	B	15.7/25.2
C1	4030017460	S.CER C1005 JB 1H 102K-T	T	25.2/27.0
C4	4030017460	S.CER C1005 JB 1H 102K-T	T	71.2/45.5
C5	4030017460	S.CER C1005 JB 1H 102K-T	T	27.9/20.4
C7	4030017460	S.CER C1005 JB 1H 102K-T	T	26.7/22.7
C8	4030017460	S.CER C1005 JB 1H 102K-T	B	14.0/6.8
C9	4030017460	S.CER C1005 JB 1H 102K-T	T	29.9/25.3
C10	4030017460	S.CER C1005 JB 1H 102K-T	T	69.3/45.5
C11	4030017350	S.CER C1005 CH 1H 020B-T	T	27.6/22.7
C12	4030017460	S.CER C1005 JB 1H 102K-T	B	25.5/44.4

Eqv.= This component is equivalent to the REF No. component listed above, and may be substituted on parts orders and repairs.

M.=Mounted side (T: Mounted on the Top side, B: Mounted on the Bottom side)
S.=Surface mount

[MAIN UNIT]

REF NO.	PARTS NO.	DESCRIPTION	M.	H/V LOCATION
C13	4030017030	S.CER C1005 JB 1A 273K-T	T	28.5/22.7
C14	4550008160	S.TAN F931A226MAA	B	23.7/42.1
C15	4030017460	S.CER C1005 JB 1H 102K-T	T	33.5/20.4
C18	4030017460	S.CER C1005 JB 1H 102K-T	B	23.5/44.4
C19	4030017420	S.CER C1005 CH 1H 470J-T	B	37.0/40.3
C20	4030017420	S.CER C1005 CH 1H 470J-T	T	86.0/30.5
C21	4520000020	S.NIO NOJC227M006RWJV	T	26.7/36.2
C22	4050000240	S.FEE NFM18PC104R1C3D	B	49.4/41.8
C23	4510010250	S.ELE 16 CE 22 LD	T	58.0/47.1
C24	4030017460	S.CER C1005 JB 1H 102K-T	T	62.0/45.5
C25	4520000020	S.NIO NOJC227M006RWJV	T	85.4/26.6
C26	4030019990	S.CER C1005 JB 1C 104K-T	B	58.3/44.2
C29	4030020310	S.CER GRM31CB31C106KA88L	B	51.1/43.4
C30	4030017630	S.CER C1005 CH 1H 120J-T	T	64.3/12.2
C31	4030017460	S.CER C1005 JB 1H 102K-T	B	66.1/41.0
C32	4030019460	S.CER C1608 JB 0J 106M-T	T	51.3/20.6
C33	4030017460	S.CER C1005 JB 1H 102K-T	T	54.8/26.8
C34	4030019990	S.CER C1005 JB 1C 104K-T	B	90.5/37.0
C35	4030020310	S.CER GRM31CB31C106KA88L	B	67.7/42.7
C36	4030016790	S.CER C1005 JB 1E 103K-T	T	62.5/13.1
C37	4030019990	S.CER C1005 JB 1C 104K-T	B	57.4/40.5
C38	4030018860	S.CER C1005 JB 0J 105K-T	B	90.5/36.1
C39	4030018860	S.CER C1005 JB 0J 105K-T	T	62.5/12.2
C40	4550007600	S.TAN F920J106MPABMA	T	56.2/27.7
C41	4030020310	S.CER GRM31CB31C106KA88L	B	88.8/11.5
C42	4030020310	S.CER GRM31CB31C106KA88L	B	88.8/13.6
C43	4030019120	S.CER GRM188B31E105KA75D	T	47.4/20.5
C44	4030017460	S.CER C1005 JB 1H 102K-T	T	71.0/40.5
C45	4030017620	S.CER C1005 CH 1H 100C-T	T	64.2/19.9
C46	4030019990	S.CER C1005 JB 1C 104K-T	B	90.5/35.2
C48	4030018900	S.CER C1005 JB 0J 474K-T	B	86.6/31.2
C49	4030017460	S.CER C1005 JB 1H 102K-T	T	62.5/20.8
C50	4030016970	S.CER C1005 JB 1E 223K-T	B	90.5/34.3
C52	4030018860	S.CER C1005 JB 0J 105K-T	T	48.7/36.1
C53	4030019120	S.CER GRM188B31E105KA75D	T	87.7/34.3
C55	4030019990	S.CER C1005 JB 1C 104K-T	T	48.7/35.2
C56	4030019120	S.CER GRM188B31E105KA75D	B	83.8/9.6
C57	4030019120	S.CER GRM188B31E105KA75D	T	52.6/20.6
C59	4030017730	S.CER C1005 JB 1H 471K-T	T	48.7/33.4
C61	4030020310	S.CER GRM31CB31C106KA88L	B	81.6/16.2
C62	4030017430	S.CER C1005 CH 1H 101J-T	T	22.5/21.6
C63	4030019490	S.CER C2012 JB 1A 106K-T	T	89.8/37.0
C64	4030020310	S.CER GRM31CB31C106KA88L	B	81.6/18.3
C65	4030017460	S.CER C1005 JB 1H 102K-T	T	22.5/20.7
C66	4030017640	S.CER C1005 CH 1H 150J-T	B	81.5/20.1
C67	4030017460	S.CER C1005 JB 1H 102K-T	T	49.0/31.9
C68	4030017460	S.CER C1005 JB 1H 102K-T	T	89.7/35.0
C69	4030019460	S.CER C1608 JB 0J 106M-T	B	87.9/22.6
C70	4030017460	S.CER C1005 JB 1H 102K-T	T	48.7/34.3
C71	4030017460	S.CER C1005 JB 1H 102K-T	T	20.9/20.7
C73	4030017460	S.CER C1005 JB 1H 102K-T	T	53.7/37.3
C74	4550008800	S.TAN 278M2002 104MR	T	49.5/39.5
C75	4030017460	S.CER C1005 JB 1H 102K-T	T	87.9/35.4
C78	4030017460	S.CER C1005 JB 1H 102K-T	T	24.0/14.3
C82	4030017460	S.CER C1005 JB 1H 102K-T	T	56.5/36.4
C84	4030017460	S.CER C1005 JB 1H 102K-T	T	25.8/14.2
C85	4030017460	S.CER C1005 JB 1H 102K-T	T	62.5/19.9
C87	4030017530	S.CER C1005 CH 1H 0R5B-T	B	33.7/37.1
C91	4030019990	S.CER C1005 JB 1C 104K-T	T	48.0/40.0
C92	4030017460	S.CER C1005 JB 1H 102K-T	T	47.6/41.2
C94	4030017460	S.CER C1005 JB 1H 102K-T	T	27.4/13.7
C96	4550008480	S.TAN F921C225MPA	T	44.6/41.2
C102	4550008150	S.TAN F921V224MAA	T	44.2/39.2
C110	4030017460	S.CER C1005 JB 1H 102K-T	T	56.3/39.3
C126	4030017460	S.CER C1005 JB 1H 102K-T	T	31.5/30.2
C127	4030019990	S.CER C1005 JB 1C 104K-T	T	26.1/29.0
C136	4030019460	S.CER C1608 JB 0J 106M-T	T	51.7/44.5
C143	4030019990	S.CER C1005 JB 1C 104K-T	T	54.0/45.5
C145	4030016790	S.CER C1005 JB 1E 103K-T	B	75.9/23.3
C150	4030017460	S.CER C1005 JB 1H 102K-T	B	82.1/9.2
C151	4030017460	S.CER C1005 JB 1H 102K-T	B	86.6/10.0
C166	4030017460	S.CER C1005 JB 1H 102K-T	T	37.2/27.2
C167	4030017340	S.CER C1005 CH 1H 010B-T	T	39.8/33.0
C169	4030017460	S.CER C1005 JB 1H 102K-T	T	59.5/30.6
C170	4030019990	S.CER C1005 JB 1C 104K-T	B	67.3/25.9
C171	4030019990	S.CER C1005 JB 1C 104K-T	B	69.2/25.9
C172	4030017620	S.CER C1005 CH 1H 100C-T	T	62.1/27.8
C173	4030016790	S.CER C1005 JB 1E 103K-T	T	36.1/20.4
C174	4030019990	S.CER C1005 JB 1C 104K-T	T	69.6/32.2
C175	4030019990	S.CER C1005 JB 1C 104K-T	T	71.2/32.2
C176	4550008160	S.TAN F931A226MAA	T	35.7/23.4
C177	4030017460	S.CER C1005 JB 1H 102K-T	T	17.2/45.1
C178	4030016790	S.CER C1005 JB 1E 103K-T	T	62.1/30.1
C179	4030017500	S.CER C1005 CH 1H 560J-T	T	60.4/32.2
C180	4030017460	S.CER C1005 JB 1H 102K-T	B	62.8/27.4
C181	4030016950	S.CER C1005 JB 1A 473K-T	T	71.5/34.0
C182	4030017570	S.CER C1005 CH 1H 040B-T	T	60.4/33.1
C183	4030017460	S.CER C1005 JB 1H 102K-T	T	25.6/30.2
C185	4030017590	S.CER C1005 CH 1H 070C-T	T	60.4/34.9
C186	4030017730	S.CER C1005 JB 1H 471K-T	B	69.3/29.2
C187	4030019990	S.CER C1005 JB 1C 104K-T	B	68.3/29.9
C189	4030017460	S.CER C1005 JB 1H 102K-T	T	16.0/39.5
C190	4030019990	S.CER C1005 JB 1C 104K-T	B	71.6/35.4
C192	4030017730	S.CER C1005 JB 1H 471K-T	B	70.2/29.2
C193	4030017460	S.CER C1005 JB 1H 102K-T	B	70.6/26.4
C194	4030016950	S.CER C1005 JB 1A 473K-T	T	17.2/44.1
C195	4030017360	S.CER C1005 CH 1H 030B-T	T	60.4/34.0
C196	4030019990	S.CER C1005 JB 1C 104K-T	B	72.1/32.3
C197	4030019990	S.CER C1005 JB 1C 104K-T	B	20.2/36.8
C198	4030016790	S.CER C1005 JB 1E 103K-T	T	17.2/42.1
C199	4030018860	S.CER C1005 JB 0J 105K-T	T	67.5/39.0
C200	4030017460	S.CER C1005 JB 1H 102K-T	B	18.5/35.6
C201	4030017460	S.CER C1005 JB 1H 102K-T	T	22.2/30.9
C202	4030016790	S.CER C1005 JB 1E 103K-T	B	72.1/34.1
C203	4030017460	S.CER C1005 JB 1H 102K-T	B	19.3/38.4

[MAIN UNIT]

REF NO.	PARTS NO.	DESCRIPTION	M.	H/V LOCATION
C204	4030017460	S.CER C1005 JB 1H 102K-T	B	22.1/38.4
C206	4030016790	S.CER C1005 JB 1E 103K-T	B	20.2/38.4
C207	4030017460	S.CER C1005 JB 1H 102K-T	T	15.1/39.5
C208	4030017460	S.CER C1005 JB 1H 102K-T	T	21.0/30.5
C210	4550007520	S.TAN F931A106MAABMA	T	64.5/39.3
C212	4030017460	S.CER C1005 JB 1H 102K-T	B	69.3/27.6
C214	4030017460	S.CER C1005 JB 1H 102K-T	B	72.1/33.2
C215	4030017460	S.CER C1005 JB 1H 102K-T	T	11.4/37.9
C216	4030017460	S.CER C1005 JB 1H 102K-T	B	13.2/38.5
C217	4030017460	S.CER C1005 JB 1H 102K-T	B	15.2/41.0
C218	4030017040	S.CER C1005 JB 1A 333K-T	B	62.6/32.8
C219	4030019990	S.CER C1005 JB 1C 104K-T	B	14.1/38.5
C220	4030017460	S.CER C1005 JB 1H 102K-T	B	13.9/40.9
C221	4030019560	S.CER GRM21BB31C106KE15L	B	16.2/44.2
C222	4030017460	S.CER C1005 JB 1H 102K-T	B	62.6/34.6
C223	4030019990	S.CER C1005 JB 1C 104K-T	B	15.0/37.6
C224	4030017630	S.CER C1005 CH 1H 120J-T	B	13.9/41.8
C225	4030017460	S.CER C1005 JB 1H 102K-T	B	14.2/44.2
C226	4030017670	S.CER C1005 CH 1H 390J-T	B	66.2/29.8
C228	4030019990	S.CER C1005 JB 1C 104K-T	B	64.0/29.6
C229	4030019990	S.CER C1005 JB 1C 104K-T	B	12.4/44.2
C230	4030016790	S.CER C1005 JB 1E 103K-T	T	17.2/39.3
C231	4030016790	S.CER C1005 JB 1E 103K-T	T	20.5/36.0
C232	4030019990	S.CER C1005 JB 1C 104K-T	B	59.7/28.2
C233	4030018890	S.CER C1005 JB 0J 224K-T	T	20.5/33.3
C234	4030016790	S.CER C1005 JB 1E 103K-T	T	18.5/31.7
C235	4030016790	S.CER C1005 JB 1E 103K-T	B	62.5/35.9
C236	4030017460	S.CER C1005 JB 1H 102K-T	T	12.5/34.5
C237	4030017460	S.CER C1005 JB 1H 102K-T	T	7.8/38.2
C238	4030016790	S.CER C1005 JB 1E 103K-T	B	57.3/33.6
C240	4030016790	S.CER C1005 JB 1E 103K-T	B	60.7/34.0
C242	4550007650	S.TAN F931V105MAABMA	T	16.9/29.0
C243	4030017460	S.CER C1005 JB 1H 102K-T	B	59.5/32.1
C244	4030017650	S.CER C1005 CH 1H 270J-T	B	58.2/33.6
C245	4030017420	S.CER C1005 CH 1H 470J-T	T	10.4/35.9
C246	4030017460	S.CER C1005 JB 1H 102K-T	T	20.5/35.1
C248	4030019990	S.CER C1005 JB 1C 104K-T	T	5.9/33.9
C250	4030017400	S.CER C1005 CH 1H 220J-T	T	10.1/33.6
C251	4030017460	S.CER C1005 JB 1H 102K-T	T	18.8/27.0
C252	4030017460	S.CER C1005 JB 1H 102K-T	T	5.0/33.9
C253	4030016790	S.CER C1005 JB 1E 103K-T	B	56.1/34.1
C254	4030017670	S.CER C1005 CH 1H 390J-T	T	8.8/34.1
C256	4030017600	S.CER C1005 CH 1H 080C-T	B	54.9/32.6
C259	4030017640	S.CER C1005 CH 1H 150J-T	B	51.1/30.5
C263	4030016790	S.CER C1005 JB 1E 103K-T	B	43.2/34.6
C264	4030017580	S.CER C1005 CH 1H 060C-T	B	44.5/35.0
C270	4030016790	S.CER C1005 JB 1E 103K-T	B	84.7/29.1
C271	4030020120	S.CER C1005 JB 0J 225M-T	B	86.6/30.3
C272	4030018860	S.CER C1005 JB 0J 105K-T	B	83.9/26.6
C273	4030020000	S.CER C1005 JB 1A 105K-T	B	80.5/28.1
C274	4030017760	S.CER C1005 JB 1H 222K-T	B	83.3/31.1
C327	4030017380	S.CER C1005 CH 1H 050B-T	T	31.9/29.0
C328	4030017460	S.CER C1005 JB 1H 102K-T	T	34.7/26.7
C329	4030017380	S.CER C1005 CH 1H 050B-T	T	36.7/28.5
C330	4030017460	S.CER C1005 JB 1H 102K-T	T	38.1/25.0
C331	4030017430	S.CER C1005 CH 1H 101J-T	B	64.0/28.7
C336	4030017460	S.CER C1005 JB 1H 102K-T	T	52.5/28.8
C337	4030016790	S.CER C1005 JB 1E 103K-T	B	55.9/29.0
C338	4030016790	S.CER C1005 JB 1E 103K-T	B	58.3/30.2
C340	4030016950	S.CER C1005 JB 1A 473K-T	B	52.9/26.5
C341	4030019990	S.CER C1005 JB 1C 104K-T	B	54.7/26.5
C346	4030017460	S.CER C1005 JB 1H 102K-T	T	31.2/23.6
C347	4030017460	S.CER C1005 JB 1H 102K-T	T	33.5/24.5
C348	4030017460	S.CER C1005 JB 1H 102K-T	T	30.2/27.8
C351	4030017430	S.CER C1005 CH 1H 101J-T	T	11.3/34.0
C352	4030019990	S.CER C1005 JB 1C 104K-T	T	31.4/27.3
C358	4030017420	S.CER C1005 CH 1H 470J-T	B	36.1/40.3
C360	4030018860	S.CER C1005 JB 0J 105K-T	B	78.1/40.2
C362	4030018860	S.CER C1005 JB 0J 105K-T	B	17.7/28.9
C363	4030020450	S.CER C1005 JB 0J 475M-T	B	61.3/31.6
C365	4030016790	S.CER C1005 JB 1E 103K-T	B	75.3/38.5
C366	4030017570	S.CER C1005 CH 1H 040B-T	T	88.0/26.5
C367	4030017570	S.CER C1005 CH 1H 040B-T	B	86.3/27.4
C368	4030017570	S.CER C1005 CH 1H 040B-T	T	87.0/21.0
C369	4030017570	S.CER C1005 CH 1H 040B-T	B	85.1/27.1
C370	4030017570	S.CER C1005 CH 1H 040B-T	T	89.8/26.5
C371	4030017570	S.CER C1005 CH 1H 040B-T	B	86.9/37.6
C372	4030017570	S.CER C1005 CH 1H 040B-T	T	26.4/33.8
C373	4030017570	S.CER C1005 CH 1H 040B-T	T	32.1/34.9
C401	4030017460	S.CER C1005 JB 1H 102K-T	T	30.3/4.7
C402	4030018860	S.CER C1005 JB 0J 105K-T	T	27.8/4.7
C403	4030018860	S.CER C1005 JB 0J 105K-T	T	29.0/1.9
C406	4030016790	S.CER C1005 JB 1E 103K-T	T	18.1/12.0
C407	4030018080	S.CER C1005 JB 1H 182K-T	T	16.9/11.6
C408	4030017750	S.CER C1005 JB 1H 122K-T	T	17.0/13.7
C409	4030017760	S.CER C1005 JB 1H 222K-T	T	15.4/13.7
C410	4030017630	S.CER C1005 CH 1H 120J-T	T	16.6/15.4
C411	4030017360	S.CER C1005 CH 1H 030B-T	T	14.9/18.0
C412	4030019990	S.CER C1005 JB 1C 104K-T	T	27.8/3.1
C415	4030016790	S.CER C1005 JB 1E 103K-T	T	30.4/6.8
C441	4030016970	S.CER C1005 JB 1E 223K-T	B	80.1/33.4
C442	4030019990	S.CER C1005 JB 1C 104K-T	B	81.4/32.2
C443	4030019990	S.CER C1005 JB 1C 104K-T	B	80.0/32.5
C445	4030017460	S.CER C1005 JB 1H 102K-T	B	82.0/37.9
C446	4030017460	S.CER C1005 JB 1H 102K-T	B	81.7/38.8
C447	4030017620	S.CER C1005 CH 1H 100C-T	B	87.8/34.9
C448	4030017460	S.CER C1005 JB 1H 102K-T	B	84.4/37.9
C450	4030018860	S.CER C1005 JB 0J 105K-T	T	50.3/11.8
C451	4030019990	S.CER C1005 JB 1C 104K-T	T	50.3/12.7
C452	4030017460	S.CER C1005 JB 1H 102K-T	T	50.3/13.7
C453	4030017730	S.CER C1005 JB 1H 471K-T	T	50.3/14.6
C454	4030017460	S.CER C1005 JB 1H 102K-T	T	50.1/16.2
C455	4550008800	S.TAN 278M2002 104MR	T	49.5/8.6
C456	4030017460	S.CER C1005 JB 1H 102K-T	T	45.4/10.8
C457	4030017460	S.CER C1005 JB 1H 102K-T	T	51.4/6.9

Eqv.= This component is equivalent to the REF No. component listed above, and may be substituted on parts orders and repairs.

M.=Mounted side (T: Mounted on the Top side, B: Mounted on the Bottom side)
S.=Surface mount

[MAIN UNIT]

REF NO.	PARTS NO.	DESCRIPTION	M.	H/V LOCATION
C458	4030019990	S.CER C1005 JB 1C 104K-T	T	50.9/8.1
C459	4550008480	S.TAN F921C225MPA	T	54.4/7.0
C460	4550008150	S.TAN F921V224MAA	T	54.9/8.9
C461	4030017460	S.CER C1005 JB 1H 102K-T	T	42.5/11.7
C462	4030019990	S.CER C1005 JB 1C 104K-T	T	43.0/7.0
C463	4030017460	S.CER C1005 JB 1H 102K-T	T	42.8/8.8
C464	4030017460	S.CER C1005 JB 1H 102K-T	T	39.4/34.2
C465	4030017430	S.CER C1005 CH 1H 101J-T	T	59.5/14.1
C466	4030017460	S.CER C1005 JB 1H 102K-T	T	39.4/35.1
C467	4030017430	S.CER C1005 CH 1H 101J-T	T	59.5/13.2
C468	4030017460	S.CER C1005 JB 1H 102K-T	T	42.4/37.7
C469	4030017430	S.CER C1005 CH 1H 101J-T	T	56.6/10.5
C470	4030017570	S.CER C1005 CH 1H 040B-T	T	44.5/18.5
C471	4030017570	S.CER C1005 CH 1H 040B-T	T	44.4/22.0
C472	4030017460	S.CER C1005 JB 1H 102K-T	T	42.8/18.5
C473	4030018900	S.CER C1005 JB 0J 474K-T	T	42.8/22.0
C474	4030017570	S.CER C1005 CH 1H 040B-T	T	48.0/26.4
C475	4030017570	S.CER C1005 CH 1H 040B-T	T	46.3/26.5
C476	4030017570	S.CER C1005 CH 1H 040B-T	T	47.1/30.1
C477	4030017460	S.CER C1005 JB 1H 102K-T	T	51.3/26.4
C478	4030017460	S.CER C1005 JB 1H 102K-T	T	53.5/28.8
C479	4030017460	S.CER C1005 JB 1H 102K-T	T	44.7/26.5
C480	4030017460	S.CER C1005 JB 1H 102K-T	T	45.5/30.1
C481	4030017570	S.CER C1005 CH 1H 040B-T	T	49.6/26.4
C485	4030017460	S.CER C1005 JB 1H 102K-T	T	46.1/18.5
C503	4030017460	S.CER C1005 JB 1H 102K-T	T	12.0/8.0
C504	4030017460	S.CER C1005 JB 1H 102K-T	T	14.8/8.1
C505	4030007080	S.CER C1608 CH 1H 390J-T	T	6.3/25.2
C507	4030020100	S.CER GQM1882C1H110GB01D (G) [EUR]	T	9.8/25.2
	4030020100	S.CER GQM1882C1H110GB01D (G) [UK]		
	4030020100	S.CER GQM1882C1H110GB01D (G) [ITR]		
	4030021410	S.CER GQM1882C1H100GB01D (G) [USA]		
	4030020100	S.CER GQM1882C1H110GB01D (G) [KOR]		
	4030020100	S.CER GQM1882C1H110GB01D (G) [EXP]		
	4030020100	S.CER GQM1882C1H110GB01D (G) [EXP-01]		
	4030020100	S.CER GQM1882C1H110GB01D (G) [CHN]		
	4030020100	S.CER GQM1882C1H110GB01D (G) [AUS]		
	4030020100	S.CER GQM1882C1H110GB01D (G) [EUR-01]		
	4030021410	S.CER GQM1882C1H100GB01D (G) [USA-01]		
	4030020100	S.CER GQM1882C1H110GB01D (G) [EUR-02]		
	4030021410	S.CER GQM1882C1H100GB01D (G) [USA-02]		
	4030020100	S.CER GQM1882C1H110GB01D (G) [EUR-03]		
	4030021410	S.CER GQM1882C1H100GB01D (G) [USA-03]		
	4030020100	S.CER GQM1882C1H110GB01D (G) [EUR-04]		
	4030021410	S.CER GQM1882C1H100GB01D (G) [USA-04]		
	4030020100	S.CER GQM1882C1H110GB01D (G) [EUR-05]		
	4030021410	S.CER GQM1882C1H100GB01D (G) [USA-05]		
	4030020100	S.CER GQM1882C1H110GB01D (G) [EUR-06]		
	4030020100	S.CER GQM1882C1H110GB01D (G) [UK-06]		
	4030021410	S.CER GQM1882C1H100GB01D (G) [USA-06]		
	4030020100	S.CER GQM1882C1H110GB01D (G) [CHN-06]		
C508	4030020100	S.CER GQM1882C1H110GB01D (G)	T	11.0/25.2
C509	4030017460	S.CER C1005 JB 1H 102K-T	B	6.5/24.3
C510	4030017590	S.CER C1005 CH 1H 070C-T [EUR]	T	12.3/22.6
	4030017590	S.CER C1005 CH 1H 070C-T [UK]		
	4030017590	S.CER C1005 CH 1H 070C-T [ITR]		
	4030017600	S.CER C1005 CH 1H 080C-T [USA]		
	4030017590	S.CER C1005 CH 1H 070C-T [KOR]		
	4030017590	S.CER C1005 CH 1H 070C-T [EXP]		
	4030017590	S.CER C1005 CH 1H 070C-T [EXP-01]		
	4030017590	S.CER C1005 CH 1H 070C-T [CHN]		
	4030017590	S.CER C1005 CH 1H 070C-T [AUS]		
	4030017590	S.CER C1005 CH 1H 070C-T [EUR-01]		
	4030017600	S.CER C1005 CH 1H 080C-T [USA-01]		
	4030017590	S.CER C1005 CH 1H 070C-T [EUR-02]		
	4030017600	S.CER C1005 CH 1H 080C-T [USA-02]		
	4030017590	S.CER C1005 CH 1H 070C-T [EUR-03]		
	4030017600	S.CER C1005 CH 1H 080C-T [USA-03]		
	4030017590	S.CER C1005 CH 1H 070C-T [EUR-04]		
	4030017600	S.CER C1005 CH 1H 080C-T [USA-04]		
	4030017590	S.CER C1005 CH 1H 070C-T [EUR-05]		
	4030017600	S.CER C1005 CH 1H 080C-T [USA-05]		
	4030017590	S.CER C1005 CH 1H 070C-T [EUR-06]		
	4030017590	S.CER C1005 CH 1H 070C-T [UK-06]		
	4030017600	S.CER C1005 CH 1H 080C-T [USA-06]		
	4030017590	S.CER C1005 CH 1H 070C-T [CHN-06]		
C511	4030007120	S.CER C1608 CH 1H 820J-T	T	1.8/25.2
C512	4030017420	S.CER C1005 CH 1H 470J-T	T	12.3/21.0
C513	4030017460	S.CER C1005 JB 1H 102K-T	T	14.1/17.0
C514	4030017460	S.CER C1005 JB 1H 102K-T	T	11.6/18.2
C515	4030017460	S.CER C1005 JB 1H 102K-T	T	14.1/14.6
C516	4030017430	S.CER C1005 CH 1H 101J-T	T	3.5/23.2

[MAIN UNIT]

REF NO.	PARTS NO.	DESCRIPTION	M.	H/V LOCATION
C517	4030017460	S.CER C1005 JB 1H 102K-T	B	5.2/23.9
C518	4030017460	S.CER C1005 JB 1H 102K-T	T	10.7/22.9
C519	4030017440	S.CER C1005 CH 1H 221J-T	B	7.9/20.0
C520	4030017520	S.CER C1005 CH 1H 0R3B-T	B	11.2/21.3
C521	4030017640	S.CER C1005 CH 1H 150J-T	T	3.5/22.3
C522	4030017570	S.CER C1005 CH 1H 040B-T	B	17.4/17.7
C524	4030017580	S.CER C1005 CH 1H 060C-T	B	15.8/18.6
C525	4030017640	S.CER C1005 CH 1H 150J-T	T	10.7/21.5
C526	4030017530	S.CER C1005 CH 1H 0R5B-T	B	13.7/17.2
C527	4030017460	S.CER C1005 JB 1H 102K-T	B	8.3/16.2
C528	4030017590	S.CER C1005 CH 1H 070C-T	B	17.1/15.0
C529	4030017620	S.CER C1005 CH 1H 100C-T	B	15.2/12.4
C530	4030020000	S.CER C1005 JB 1A 105K-T	B	13.1/23.1
C531	4030017460	S.CER C1005 JB 1H 102K-T	B	17.1/14.0
C532	4030017520	S.CER C1005 CH 1H 0R3B-T	B	12.3/17.0
C533	4030017460	S.CER C1005 JB 1H 102K-T	B	3.9/21.5
C536	4030017520	S.CER C1005 CH 1H 0R3B-T	B	13.4/16.0
C539	4030017590	S.CER C1005 CH 1H 070C-T	B	13.3/12.1
C540	4030017460	S.CER C1005 JB 1H 102K-T	B	17.9/10.5
C541	4030017440	S.CER C1005 CH 1H 221J-T	B	7.9/12.8
C543	4030017460	S.CER C1005 JB 1H 102K-T	B	2.2/20.7
C544	4030019990	S.CER C1005 JB 1C 104K-T	T	3.5/21.4
C545	4030017600	S.CER C1005 CH 1H 080C-T	B	12.0/12.6
C546	4030017530	S.CER C1005 CH 1H 0R5B-T	T	1.6/19.9
C547	4030017390	S.CER C1005 CH 1H 180J-T	T	1.9/21.4
C548	4030017670	S.CER C1005 CH 1H 390J-T	B	12.0/11.4
C549	4030017350	S.CER C1005 CH 1H 020B-T	T	2.5/19.9
C550	4030017570	S.CER C1005 CH 1H 040B-T	B	10.3/11.4
C551	4030017430	S.CER C1005 CH 1H 101J-T	B	9.2/9.9
C552	4030017530	S.CER C1005 CH 1H 0R5B-T	T	6.6/18.6
C553	4030017650	S.CER C1005 CH 1H 270J-T	T	2.1/18.0
C554	4030017590	S.CER C1005 CH 1H 070C-T	B	8.7/11.4
C555	4030017340	S.CER C1005 CH 1H 010B-T	T	8.6/20.0
C556	4030017650	S.CER C1005 CH 1H 270J-T	T	8.0/15.6
C560	4030017460	S.CER C1005 JB 1H 102K-T	B	3.9/20.6
C602	4030017630	S.CER C1005 CH 1H 120J-T	B	49.6/25.1
C603	4030018070	S.CER C1005 CH 1H 300J-T	B	49.7/20.8
C604	4030017340	S.CER C1005 CH 1H 010B-T	B	48.6/23.3
C605	4030017340	S.CER C1005 CH 1H 010B-T	B	47.3/21.9
C606	4030018860	S.CER C1005 JB 0J 105K-T	B	39.2/20.4
C607	4030018070	S.CER C1005 CH 1H 300J-T	B	46.0/19.9
C608	4030017460	S.CER C1005 JB 1H 102K-T	B	48.6/19.9
C609	4030017460	S.CER C1005 JB 1H 102K-T	B	39.2/19.5
C610	4030017510	S.CER C1005 CH 1H 680J-T	B	43.6/22.3
C613	4030017460	S.CER C1005 JB 1H 102K-T	B	39.2/17.7
C614	4030017430	S.CER C1005 CH 1H 101J-T	B	42.2/14.4
C615	4030017350	S.CER C1005 CH 1H 020B-T	B	42.2/12.7
C616	4030017460	S.CER C1005 JB 1H 102K-T	B	39.6/11.4
C617	4030017530	S.CER C1005 CH 1H 0R5B-T	B	39.6/13.9
C619	4030017380	S.CER C1005 CH 1H 050B-T	B	37.0/12.6
C620	4030017540	S.CER C1005 CH 1H R75B-T	B	35.5/11.9
C621	4030019990	S.CER C1005 JB 1C 104K-T	B	32.7/4.9
C623	4030017350	S.CER C1005 CH 1H 020B-T	B	31.3/6.1
C625	4030017340	S.CER C1005 CH 1H 010B-T	B	28.8/7.2
C626	4030018860	S.CER C1005 JB 0J 105K-T	B	27.9/7.2
C627	4030017460	S.CER C1005 JB 1H 102K-T	B	26.1/7.2
C630	4030017590	S.CER C1005 CH 1H 070C-T	B	23.4/5.4
C631	4030017600	S.CER C1005 CH 1H 080C-T	B	22.1/6.0
C634	4030017580	S.CER C1005 CH 1H 060C-T	B	20.8/6.4
C635	4030017460	S.CER C1005 JB 1H 102K-T	B	19.0/9.1
C641	4030017630	S.CER C1005 CH 1H 120J-T	B	52.3/10.1
C642	4030018070	S.CER C1005 CH 1H 300J-T	B	52.6/5.8
C643	4030017340	S.CER C1005 CH 1H 010B-T	B	51.6/8.8
C644	4030017340	S.CER C1005 CH 1H 010B-T	B	51.6/7.0
C645	4030017460	S.CER C1005 JB 1H 102K-T	B	47.8/9.2
C646	4030018070	S.CER C1005 CH 1H 300J-T	B	49.9/5.8
C647	4030017460	S.CER C1005 JB 1H 102K-T	B	51.2/4.6
C648	4030017460	S.CER C1005 JB 1H 102K-T	B	47.8/10.1
C649	4030017510	S.CER C1005 CH 1H 680J-T	B	49.0/7.9
C652	4030017460	S.CER C1005 JB 1H 102K-T	B	46.2/9.2
C653	4030017430	S.CER C1005 CH 1H 101J-T	B	42.9/8.2
C654	4030017350	S.CER C1005 CH 1H 020B-T	B	42.4/7.0
C655	4030017530	S.CER C1005 CH 1H 0R5B-T	B	39.8/8.2
C657	4030017540	S.CER C1005 CH 1H R75B-T	B	35.6/7.2
C658	4030017380	S.CER C1005 CH 1H 050B-T	B	37.0/7.4
C659	4030017460	S.CER C1005 JB 1H 102K-T	B	39.8/9.4
C701	4030017640	S.CER C1005 CH 1H 150J-T	B	39.0/27.3
C702	4030017460	S.CER C1005 JB 1H 102K-T	B	34.2/22.8
C703	4030017430	S.CER C1005 CH 1H 101J-T	B	34.6/27.1
C704	4030017530	S.CER C1005 CH 1H 0R5B-T	B	37.5/25.8
C705	4030017660	S.CER C1005 CH 1H 330J-T	B	36.6/25.8
C706	4030018860	S.CER C1005 JB 0J 105K-T	B	35.1/21.0
C707	4030017430	S.CER C1005 CH 1H 101J-T	B	34.6/24.3
C708	4030017460	S.CER C1005 JB 1H 102K-T	B	34.2/25.8
C709	4030017460	S.CER C1005 JB 1H 102K-T	B	34.2/21.0
C710	4030017460	S.CER C1005 JB 1H 102K-T	B	37.1/23.2
C711	4030017430	S.CER C1005 CH 1H 101J-T	B	37.4/15.3
C712	4030017460	S.CER C1005 JB 1H 102K-T	B	14.9/24.0
C713	4030017460	S.CER C1005 JB 1H 102K-T	B	34.6/19.6
C714	4030017360	S.CER C1005 CH 1H 030B-T	B	34.8/14.9
C715	4030017430	S.CER C1005 CH 1H 101J-T	B	32.9/13.3
C716	4030017350	S.CER C1005 CH 1H 020B-T	B	29.9/11.2
C717	4030017690	S.CER C1005 CH 1H 121J-T	B	32.2/9.8
C718	4030017600	S.CER C1005 CH 1H 080C-T	B	24.8/10.7
C719	4030017560	S.CER C1005 CH 1H 2R5B-T	B	22.2/9.4
C722	4030017460	S.CER C1005 JB 1H 102K-T	B	21.8/8.2
C723	4030017460	S.CER C1005 JB 1H 102K-T	B	20.2/14.4
C724	4030017670	S.CER C1005 CH 1H 390J-T	B	17.8/23.1
C725	4030017460	S.CER C1005 JB 1H 102K-T	B	17.8/19.1
C726	4030017610	S.CER C1005 CH 1H 090C-T	B	37.4/17.1
C740	4030017640	S.CER C1005 CH 1H 150J-T	B	55.0/18.2
C741	4030017430	S.CER C1005 CH 1H 101J-T	B	52.9/18.2
C742	4030017530	S.CER C1005 CH 1H 0R5B-T	B	51.1/20.3
C743	4030017660	S.CER C1005 CH 1H 330J-T	B	51.5/19.4
C744	4030017460	S.CER C1005 JB 1H 102K-T	B	48.7/17.4

Eqv.= This component is equivalent to the REF No. component listed above, and may be substituted on parts orders and repairs.

M.=Mounted side (T: Mounted on the Top side, B: Mounted on the Bottom side)
S.=Surface mount

[MAIN UNIT]

REF NO.	PARTS NO.	DESCRIPTION	M.	H/V LOCATION
C745	4030017430	S.CER C1005 CH 1H 101J-T	B	50.3/16.2
C746	4030017440	S.CER C1005 CH 1H 221J-T	B	51.2/16.2
C748	4030017460	S.CER C1005 JB 1H 102K-T	B	48.3/16.2
C749	4030017610	S.CER C1005 CH 1H 090C-T	B	48.4/13.8
C750	4030017430	S.CER C1005 CH 1H 101J-T	B	49.3/13.8
C751	4030017460	S.CER C1005 JB 1H 102K-T	B	45.1/16.9
C752	4030017360	S.CER C1005 CH 1H 030B-T	B	44.2/14.2
C753	4030017430	S.CER C1005 CH 1H 101J-T	B	38.4/9.4
C754	4030017350	S.CER C1005 CH 1H 020B-T	B	30.7/10.3
C755	4030017460	S.CER C1005 JB 1H 102K-T	B	34.7/9.8
C756	4030017460	S.CER C1005 JB 1H 102K-T	B	29.5/9.8
C757	4030017460	S.CER C1005 JB 1H 102K-T	T	29.1/11.7
C780	4030016790	S.CER C1005 JB 1E 103K-T	T	26.4/8.7
C781	4030017430	S.CER C1005 CH 1H 101J-T	T	19.0/14.7
C782	4030016790	S.CER C1005 JB 1E 103K-T	T	25.5/7.1
C783	4030017400	S.CER C1005 CH 1H 220J-T	T	18.0/14.8
C784	4030017610	S.CER C1005 CH 1H 090C-T	T	18.0/16.4
C785	4030017660	S.CER C1005 CH 1H 330J-T	T	19.3/19.7
C786	4030017670	S.CER C1005 CH 1H 390J-T	T	17.7/17.6
C788	4030017460	S.CER C1005 JB 1H 102K-T	T	16.5/17.0
C789	4030017430	S.CER C1005 CH 1H 101J-T	B	15.4/22.8
C791	4030017460	S.CER C1005 JB 1H 102K-T	T	35.6/35.3
C792	4030017460	S.CER C1005 JB 1H 102K-T	B	38.6/40.6
C793	4030017430	S.CER C1005 CH 1H 101J-T	B	33.7/35.5
C794	4030017340	S.CER C1005 CH 1H 010B-T	B	34.9/35.3
C795	4030018860	S.CER C1005 JB 0J 105K-T	B	42.3/41.9
C796	4030017570	S.CER C1005 CH 1H 040B-T	B	43.5/40.8
C797	4030017570	S.CER C1005 CH 1H 040B-T	B	34.9/40.5
C801	4030017460	S.CER C1005 JB 1H 102K-T	B	47.5/29.2
C802	4030017400	S.CER C1005 CH 1H 220J-T	B	45.9/28.2
C803	4030016790	S.CER C1005 JB 1E 103K-T	B	47.5/28.2
C804	4030017460	S.CER C1005 JB 1H 102K-T	B	50.5/25.1
C805	4030017460	S.CER C1005 JB 1H 102K-T	B	46.1/24.2
C806	4030017350	S.CER C1005 CH 1H 020B-T	B	44.6/26.6
C811	4030017460	S.CER C1005 JB 1H 102K-T	B	56.4/10.3
C812	4030017640	S.CER C1005 CH 1H 150J-T	B	56.4/12.1
C813	4030016790	S.CER C1005 JB 1E 103K-T	B	55.8/9.4
C814	4030017460	S.CER C1005 JB 1H 102K-T	B	54.1/13.4
C815	4030017460	S.CER C1005 JB 1H 102K-T	B	53.2/13.4
C817	4030017350	S.CER C1005 CH 1H 020B-T	B	53.2/15.0
C820	4030017460	S.CER C1005 JB 1H 102K-T	B	41.2/31.0
C821	4030017400	S.CER C1005 CH 1H 220J-T	B	39.6/31.9
C822	4030016790	S.CER C1005 JB 1E 103K-T	B	41.2/31.9
C823	4030017460	S.CER C1005 JB 1H 102K-T	B	42.2/30.0
C824	4030017460	S.CER C1005 JB 1H 102K-T	B	40.1/26.0
C825	4030017590	S.CER C1005 CH 1H 070C-T	B	41.0/25.8
C826	4030017400	S.CER C1005 CH 1H 220J-T	B	42.2/25.8
C830	4030017460	S.CER C1005 JB 1H 102K-T	B	58.5/19.5
C831	4030017640	S.CER C1005 CH 1H 150J-T	B	60.9/16.5
C832	4030016790	S.CER C1005 JB 1E 103K-T	B	58.5/20.4
C833	4030017460	S.CER C1005 JB 1H 102K-T	B	54.2/21.5
C834	4030017460	S.CER C1005 JB 1H 102K-T	B	56.9/19.5
C836	4030017460	S.CER C1005 JB 1H 102K-T	B	56.9/20.4
C850	4030017420	S.CER C1005 CH 1H 470J-T	B	66.0/15.6
C852	4030017460	S.CER C1005 JB 1H 102K-T	B	67.8/17.8
C853	4030017460	S.CER C1005 JB 1H 102K-T	B	62.6/18.4
C854	4030017460	S.CER C1005 JB 1H 102K-T	B	62.6/16.6
C855	4030017460	S.CER C1005 JB 1H 102K-T	B	67.8/16.8
C856	4030017420	S.CER C1005 CH 1H 470J-T	B	62.6/17.5
C858	4030017420	S.CER C1005 CH 1H 470J-T	B	65.7/14.3
C859	4030017420	S.CER C1005 CH 1H 470J-T	B	62.2/20.2
C860	4030017430	S.CER C1005 CH 1H 101J-T	B	62.2/14.3
C861	4030017420	S.CER C1005 CH 1H 470J-T	B	64.7/22.6
C862	4030017460	S.CER C1005 JB 1H 102K-T	T	85.1/21.2
C863	4030018860	S.CER C1005 JB 0J 105K-T	T	22.6/8.1
C864	4030018860	S.CER C1005 JB 0J 105K-T	T	20.3/10.2
C865	4030017460	S.CER C1005 JB 1H 102K-T	T	85.1/19.4
C880	4030016790	S.CER C1005 JB 1E 103K-T	B	64.6/7.4
C881	4030017590	S.CER C1005 CH 1H 070C-T	B	63.1/7.0
C882	4030017390	S.CER C1005 CH 1H 180J-T	B	56.4/7.2
C883	4030017580	S.CER C1005 CH 1H 060C-T	B	60.6/13.6
C884	4030016790	S.CER C1005 JB 1E 103K-T	B	59.0/14.5
C900	4030017390	S.CER C1005 CH 1H 180J-T	T	77.1/10.7
C901	4030017460	S.CER C1005 JB 1H 102K-T	T	64.7/10.7
C903	4030017390	S.CER C1005 CH 1H 180J-T	T	60.4/16.6
C904	4030016790	S.CER C1005 JB 1E 103K-T	T	62.5/10.3
C906	4030017630	S.CER C1005 CH 1H 120J-T	T	62.2/7.0
C907	4030017350	S.CER C1005 CH 1H 020B-T	T	62.7/8.2
C908	4030017630	S.CER C1005 CH 1H 120J-T	T	63.1/7.0
C909	4030017730	S.CER C1005 JB 1H 471K-T	B	73.1/17.5
C910	4030019990	S.CER C1005 JB 1C 104K-T	T	75.9/10.2
C911	4030019990	S.CER C1005 JB 1C 104K-T	B	71.0/15.3
C912	4030017730	S.CER C1005 JB 1H 471K-T	B	74.3/16.6
C913	4030017460	S.CER C1005 JB 1H 102K-T	B	70.3/17.9
C914	4030017350	S.CER C1005 CH 1H 020B-T	T	64.1/9.0
C915	4030019990	S.CER C1005 JB 1C 104K-T	B	73.1/15.7
C916	4030018860	S.CER C1005 JB 0J 105K-T	B	69.0/12.0
C917	4030016790	S.CER C1005 JB 1E 103K-T	B	68.3/13.0
C918	4550007520	S.TAN F931A106MAABMA	T	74.9/6.6
C919	4030017460	S.CER C1005 JB 1H 102K-T	B	75.2/16.9
C920	4030017460	S.CER C1005 JB 1H 102K-T	B	72.2/15.7
C921	4030017040	S.CER C1005 JB 1A 333K-T	B	71.5/5.6
C922	4030017460	S.CER C1005 JB 1H 102K-T	B	71.5/6.5
C923	4030017670	S.CER C1005 CH 1H 390J-T	B	74.5/6.1
C924	4030020450	S.CER C1005 JB 0J 475M-T	T	73.3/8.6
C925	4030016790	S.CER C1005 JB 1E 103K-T	B	69.5/10.3
C926	4030016790	S.CER C1005 JB 1E 103K-T	B	66.7/7.8
C927	4030016790	S.CER C1005 JB 1E 103K-T	B	68.6/10.3
C928	4030017460	S.CER C1005 JB 1H 102K-T	B	70.1/4.8
C929	4030017390	S.CER C1005 CH 1H 180J-T	B	67.6/7.8
C930	4030019990	S.CER C1005 JB 1C 104K-T	T	85.1/11.4
C931	4030017460	S.CER C1005 JB 1H 102K-T	T	84.1/11.0
C932	4030018900	S.CER C1005 JB 0J 474K-T	T	83.8/14.5
C933	4030016790	S.CER C1005 JB 1E 103K-T	T	81.4/11.0
C934	4550008160	S.TAN F931A226MAA	T	78.8/15.6

[MAIN UNIT]

REF NO.	PARTS NO.	DESCRIPTION	M.	H/V LOCATION
C935	4030018860	S.CER C1005 JB 0J 105K-T	T	78.9/19.1
C936	4030018860	S.CER C1005 JB 0J 105K-T	T	83.8/18.6
C937	4030016790	S.CER C1005 JB 1E 103K-T	T	83.8/16.8
C938	4030017460	S.CER C1005 JB 1H 102K-T	T	80.8/18.2
C939	4030018860	S.CER C1005 JB 0J 105K-T	B	76.1/16.9
C940	4030017460	S.CER C1005 JB 1H 102K-T	B	73.6/19.7
C941	4030019990	S.CER C1005 JB 1C 104K-T	T	82.3/12.6
C951	4030019990	S.CER C1005 JB 1C 104K-T	T	29.1/12.6
C952	4030019990	S.CER C1005 JB 1C 104K-T	T	29.1/13.6
C953	4030019990	S.CER C1005 JB 1C 104K-T	T	31.0/8.7
C954	4030019990	S.CER C1005 JB 1C 104K-T	T	29.1/14.6
C955	4030019990	S.CER C1005 JB 1C 104K-T	B	64.7/24.2
C956	4030019990	S.CER C1005 JB 1C 104K-T	T	29.1/10.8
C957	4550008490	S.TAN F920J226MPA	T	36.0/7.7
C958	4030019990	S.CER C1005 JB 1C 104K-T	T	29.1/15.5
C959	4030017400	S.CER C1005 CH 1H 220J-T	B	73.4/23.1
C960	4030017400	S.CER C1005 CH 1H 220J-T	B	74.6/22.9
C961	4030016950	S.CER C1005 JB 1A 473K-T	T	38.6/15.3
C962	4030019990	S.CER C1005 JB 1C 104K-T	T	38.6/14.4
C963	4030017400	S.CER C1005 CH 1H 220J-T	T	38.6/13.5
C964	4030017460	S.CER C1005 JB 1H 102K-T	B	17.8/25.2
C965	4030019990	S.CER C1005 JB 1C 104K-T	T	24.6/8.1
C966	4030016790	S.CER C1005 JB 1E 103K-T	T	27.3/5.9
C967	4030018860	S.CER C1005 JB 0J 105K-T	T	31.6/3.7
C969	4030017460	S.CER C1005 JB 1H 102K-T	B	50.2/13.3
C970	4030017340	S.CER C1005 CH 1H 010B-T	B	47.3/22.8
C971	4030017530	S.CER C1005 CH 1H 0R5B-T	B	39.2/22.5
C972	4030017340	S.CER C1005 CH 1H 010B-T	B	51.6/7.9
C973	4030017530	S.CER C1005 CH 1H 0R5B-T	B	50.2/10.1
C974	4030017460	S.CER C1005 JB 1H 102K-T	T	42.2/30.0
C975	4030018860	S.CER C1005 JB 0J 105K-T	B	14.0/23.1
C976	4030017340	S.CER C1005 CH 1H 010B-T	B	18.1/21.8
C977	4030018860	S.CER C1005 JB 0J 105K-T	B	80.4/36.2
C978	4030017720	S.CER C1005 JB 1H 331K-T	B	77.2/33.6
C979	4030018860	S.CER C1005 JB 0J 105K-T	B	74.6/34.3
C980	4030018860	S.CER C1005 JB 0J 105K-T	B	75.4/35.8
C981	4030017400	S.CER C1005 CH 1H 220J-T	T	38.6/12.0
C982	4030017440	S.CER C1005 CH 1H 221J-T	T	47.3/11.5
C986	4030017460	S.CER C1005 JB 1H 102K-T	T	18.5/7.0
C988	4030017420	S.CER C1005 CH 1H 470J-T	B	67.8/18.7
C989	4030017460	S.CER C1005 JB 1H 102K-T	T	62.4/41.2
C990	4030017430	S.CER C1005 CH 1H 101J-T	T	19.4/12.3
C991	4030018900	S.CER C1005 JB 0J 474K-T	T	40.8/37.7
C992	4030018900	S.CER C1005 JB 0J 474K-T	T	58.2/10.5
C993	4030018900	S.CER C1005 JB 0J 474K-T	T	59.1/12.0
C994	4030017460	S.CER C1005 JB 1H 102K-T	B	80.9/35.0
C995	4030017620	S.CER C1005 CH 1H 100C-T	T	86.1/33.4
C996	4030017620	S.CER C1005 CH 1H 100C-T	T	84.9/31.6
C997	4030017620	S.CER C1005 CH 1H 100C-T	T	84.0/31.9
C998	4030017620	S.CER C1005 CH 1H 100C-T	T	81.1/41.4
C999	4030017570	S.CER C1005 CH 1H 040B-T	B	80.5/37.6
C1000	4030017570	S.CER C1005 CH 1H 040B-T	B	79.6/37.6
C1001	4030019120	S.CER GRM188B31E105KA75D	B	64.2/44.9
J2	6450000870	CON HEC2711-01-020		
J3	6510028130	S.CON AXK5S50047YG	T	78.9/37.2
J4	6510025880	CON TC38-108-01 <CFE>		
J5	6450000131	CON HSJ1102-018540		
J450	6510029520	S.CON AXK5F12347YG	T	44.1/33.8
J451	6510029520	S.CON AXK5F12347YG	T	55.0/14.3
S2	2260001900	SWI SW-149 (SKHLLDA010)		
W1	8920000570	C_C CAB-1064(UL3302AWG32 R)		
W2	8920000570	C_C CAB-1064(UL3302AWG32 R)		
EP2	6910019100	S.BEA MPZ1608S101AT	T	30.7/32.0
EP3	6910023820	S.BEA MPZ2012S101A-T	B	80.5/41.4
EP4	6910019100	S.BEA MPZ1608S101AT	T	26.8/20.6
EP5	6910019100	S.BEA MPZ1608S101AT	T	70.8/43.2
EP6	6910019100	S.BEA MPZ1608S101AT	T	69.5/43.2
EP7	6910023920	S.BEA BLM15GA750SN1D	B	26.4/45.5
EP8	6910023920	S.BEA BLM15GA750SN1D	B	21.4/43.7
EP9	6910023920	S.BEA BLM15GA750SN1D	B	23.5/45.5
EP10	6910012350	S.BEA MMZ1608Y 102BT	B	28.0/39.9
EP11	6910023920	S.BEA BLM15GA750SN1D	B	33.8/42.9
EP12	6910014680	S.BEA MMZ1608Y 121BT	B	30.2/43.6
EP13	6910018460	S.BEA MMZ1005Y102C-T	T	17.2/41.1
EP14	6910021230	S.BEA MMZ2012Y102BT	B	16.9/35.1
EP15	6910018460	S.BEA MMZ1005Y102C-T	T	17.2/40.2
EP16	6910019100	S.BEA MPZ1608S101AT	T	16.6/25.4
EP18	6910019100	S.BEA MPZ1608S101AT	T	29.7/19.9
EP19	6910018460	S.BEA MMZ1005Y102C-T	T	53.0/30.0
EP23	6910023920	S.BEA BLM15GA750SN1D	B	85.7/36.6
EP24	6910025320	S.BEA BLM15HD182SN1D	B	33.9/41.4
EP40	6910018460	S.BEA MMZ1005Y102C-T	T	60.3/15.1
EP450	6910018460	S.BEA MMZ1005Y102C-T	T	49.3/18.6
EP501	6910018460	S.BEA MMZ1005Y102C-T	T	13.5/10.0
EP780	6910018460	S.BEA MMZ1005Y102C-T	T	33.5/35.3
EP781	6910016330	S.BEA MMZ1005S 601CT-S	B	81.7/33.4
EP782	6910023920	S.BEA BLM15GA750SN1D	B	84.4/39.7
EP783	6910023920	S.BEA BLM15GA750SN1D	B	83.2/38.4
EP784	6910014690	S.BEA MPZ1608S221A-T	B	65.0/43.0
EP785	6910023920	S.BEA BLM15GA750SN1D	B	82.7/39.9
EP786	6910023920	S.BEA BLM15GA750SN1D	B	85.7/35.2
EP787	6910024150	S.BEA BLM15GG221SN1D	B	80.5/39.2
EP788	6910024150	S.BEA BLM15GG221SN1D	B	79.6/39.2

Eqv.= This component is equivalent to the REF No. component listed above, and may be substituted on parts orders and repairs.

M.=Mounted side (T: Mounted on the Top side, B: Mounted on the Bottom side)
S.=Surface mount

[VCO1 UNIT]

REF NO.	PARTS NO.	DESCRIPTION		M.	H/V LOCATION
Q1	1590004070	S.TRA	LDTC144EET1G <SLVJ>	T	7.5/1.3
Q27	1530003260	S.TRA	2SC5006-T1	T	16.6/5.4
Q200	1530003260	S.TRA	2SC5006-T1	T	16.4/8.9
Q201	1530003260	S.TRA	2SC5006-T1	T	5.4/7.8
Q202	1530003260	S.TRA	2SC5006-T1	T	5.6/11.0
Q308	1590004090	S.TRA	LDTC114YET1G <SLVJ>	T	7.3/12.9
Q311	1530003260	S.TRA	2SC5006-T1	T	17.3/15.3
D1	1750001700	S.DIO	HSC277TRF-E	T	12.3/2.5
D10	1750001610	S.VAR	HVC365TRF-E	T	9.3/1.6
D11	1750000721	S.VAR	HVC375BTRF-E	T	10.5/4.1
D12	1750000711	S.VAR	HVC350BTRF-E	T	10.5/1.6
D53	1750002540	S.DIO	LRB520G-30T1G <SLVJ>	T	8.8/6.7
D103	1750002540	S.DIO	LRB520G-30T1G <SLVJ>	T	10.5/6.5
D304	1750001610	S.VAR	HVC365TRF-E	T	10.7/11.4
D305	1750001610	S.VAR	HVC365TRF-E	T	10.5/13.9
D306	1750001610	S.VAR	HVC365TRF-E	T	9.3/12.9
D308	1750001700	S.DIO	HSC277TRF-E	T	12.4/12.3
L3	6200010630	S.COI	LQW18AN8N2D00D	T	15.0/1.7
L4	6200012170	S.COI	MLG1608S R18J-T	T	7.6/2.9
L5	6200010630	S.COI	LQW18AN8N2D00D	T	14.3/3.7
L6	6200014760	S.COI	MLK1005SR22JT	T	12.4/6.3
L200	6200014760	S.COI	MLK1005SR22JT	T	5.0/6.0
L201	6200013750	S.COI	MLK1005SR10JT	T	4.8/9.5
L202	6200013860	S.COI	MLK1005S12NJT	T	3.4/11.9
L203	6200007931	S.COI	ELJRF 12NJFB *0	T	3.4/4.8
L204	6200013800	S.COI	MLK1005S39NJT	T	14.8/9.0
L302	6200012170	S.COI	MLG1608S R18J-T	T	7.5/14.5
L306	6200009280	S.COI	LQW18AN27NG00D (LQW1608A27NG00)	T	14.3/13.5
L307	6200012050	S.COI	LQW18AN24NG00D	T	15.1/11.4
R1	7030005240	S.RES	ERJ2GEJ 473 X (47K)	T	11.6/3.8
R2	7030007290	S.RES	ERJ2GEJ 222 X (2.2K)	T	12.5/3.8
R3	7030005040	S.RES	ERJ2GEJ 472 X (4.7K)	T	13.1/1.2
R82	7030005210	S.RES	ERJ2GEJ 822 X (8.2K)	T	4.9/16.4
R83	7030005050	S.RES	ERJ2GEJ 103 X (10K)	T	5.0/3.6
R89	7030007290	S.RES	ERJ2GEJ 222 X (2.2K)	T	3.3/16.4
R100	7030007320	S.RES	ERJ2GEJ 225 X (2.2M)	T	8.0/5.2
R101	7030008270	S.RES	RR0510P-104-D (100K)	T	8.3/4.0
R114	7030005820	S.RES	RR0510P-103-D (10K)	T	16.8/1.2
R117	7030011000	S.RES	RR0510P-392-D (3.9K)	T	14.2/6.3
R120	7030008280	S.RES	ERJ2GEJ 271 X (270)	T	17.7/1.2
R126	7030005710	S.RES	ERJ2GEJ 121 X (120)	T	18.0/6.7
R200	7030004980	S.RES	ERJ2GEJ 101 X (100)	T	13.6/8.6
R201	7030005720	S.RES	ERJ2GEJ 563 X (56K)	T	16.7/7.3
R202	7030010040	S.RES	ERJ2GEJ-JPW	T	12.0/9.5
R203	7030004980	S.RES	ERJ2GEJ 101 X (100)	T	10.4/9.5
R204	7030010040	S.RES	ERJ2GEJ-JPW	T	10.6/8.6
R205	7030004970	S.RES	ERJ2GEJ 470 X (47)	T	8.4/7.6
R206	7030005060	S.RES	ERJ2GEJ 333 X (33K)	T	7.1/7.6
R207	7030004990	S.RES	ERJ2GEJ 221 X (220)	T	8.8/9.5
R208	7030005070	S.RES	ERJ2GEJ 683 X (68K)	T	7.2/10.8
R348	7030007320	S.RES	ERJ2GEJ 225 X (2.2M)	T	7.9/16.4
R352	7030008270	S.RES	RR0510P-104-D (100K)	T	7.9/15.5
R356	7030005240	S.RES	ERJ2GEJ 473 X (47K)	T	11.6/13.6
R358	7030005120	S.RES	ERJ2GEJ 102 X (1K)	T	12.5/13.6
R360	7030005040	S.RES	ERJ2GEJ 472 X (4.7K)	T	13.1/10.9
R363	7030005820	S.RES	RR0510P-103-D (10K)	T	16.5/11.2
R366	7030006010	S.RES	RR0510P-472-D (4.7K)	T	15.9/15.9
R371	7030004970	S.RES	ERJ2GEJ 470 X (47)	T	12.4/16.0
R372	7030008280	S.RES	ERJ2GEJ 271 X (270)	T	16.5/10.3
R375	7030005710	S.RES	ERJ2GEJ 121 X (120)	T	18.0/9.1
R376	7030005030	S.RES	ERJ2GEJ 152 X (1.5K)	T	5.4/4.8
C1	4030016790	S.CER	C1005 JB 1E 103K-T	T	14.0/2.1
C2	4030016790	S.CER	C1005 JB 1E 103K-T	T	11.6/1.2
C3	4030017460	S.CER	C1005 JB 1H 102K-T	T	5.1/1.5
C85	4030017460	S.CER	C1005 JB 1H 102K-T	T	4.2/1.5
C98	4030016930	S.CER	C1005 JB 1A 104K-T	T	6.6/4.0
C101	4030017460	S.CER	C1005 JB 1H 102K-T	T	6.7/4.9
C103	4030017520	S.CER	C1005 CH 1H 0R3B-T	T	9.5/3.7
C108	4030017520	S.CER	C1005 CH 1H 0R3B-T	T	9.2/4.9
C118	4030017460	S.CER	C1005 JB 1H 102K-T	T	15.1/6.3
C119	4030007010	S.CER	C1608 CH 1H 100D-T	T	14.3/4.9
C124	4030007030	S.CER	C1608 CH 1H 150J-T	T	17.0/3.7
C125	4030007010	S.CER	C1608 CH 1H 100D-T	T	17.0/2.5
C126	4030017460	S.CER	C1005 JB 1H 102K-T	T	11.5/6.3
C132	4030017540	S.CER	C1005 CH 1H R75B-T	T	18.0/5.1
C200	4030017460	S.CER	C1005 JB 1H 102K-T	T	12.4/8.3
C201	4030017400	S.CER	C1005 CH 1H 220J-T	T	13.6/9.5
C202	4030017460	S.CER	C1005 JB 1H 102K-T	T	8.4/11.3
C203	4030017460	S.CER	C1005 JB 1H 102K-T	T	6.6/6.4
C204	4030017460	S.CER	C1005 JB 1H 102K-T	T	9.0/8.6
C205	4030017460	S.CER	C1005 JB 1H 102K-T	T	3.8/7.0
C206	4030017460	S.CER	C1005 JB 1H 102K-T	T	6.4/9.5
C207	4030017650	S.CER	C1005 CH 1H 270J-T	T	8.7/10.4
C208	4030017460	S.CER	C1005 JB 1H 102K-T	T	3.0/10.5
C209	4030017570	S.CER	C1005 CH 1H 040B-T	T	3.9/14.0
C210	4030017570	S.CER	C1005 CH 1H 040B-T	T	3.0/14.0
C211	4030017350	S.CER	C1005 CH 1H 020B-T	T	3.4/12.8
C214	4030017460	S.CER	C1005 JB 1H 102K-T	T	6.0/1.5
C341	4030016930	S.CER	C1005 JB 1A 104K-T	T	5.4/15.4
C345	4030017460	S.CER	C1005 JB 1H 102K-T	T	6.6/16.1
C349	4030017460	S.CER	C1005 JB 1H 102K-T	T	10.2/16.0
C350	4030017460	S.CER	C1005 JB 1H 102K-T	T	4.8/12.9
C356	4030017520	S.CER	C1005 CH 1H 0R3B-T	T	9.3/15.0
C361	4030019990	S.CER	C1005 JB 1C 104K-T	T	12.2/10.9
C366	4030016930	S.CER	C1005 JB 1A 104K-T	T	14.0/11.8
C368	4030007040	S.CER	C1608 CH 1H 180J-T	T	14.3/14.7

[VCO1 UNIT]

REF NO.	PARTS NO.	DESCRIPTION		M.	H/V LOCATION
C374	4030017460	S.CER	C1005 JB 1H 102K-T	T	11.5/16.0
C375	4030007060	S.CER	C1608 CH 1H 270J-T	T	17.0/13.5
C376	4030007080	S.CER	C1608 CH 1H 390J-T	T	17.0/12.3
C386	4030017340	S.CER	C1005 CH 1H 010B-T	T	18.0/10.7
C389	4030017460	S.CER	C1005 JB 1H 102K-T	T	13.3/16.0
C390	4030017460	S.CER	C1005 JB 1H 102K-T	T	5.7/12.9
C391	4030017460	S.CER	C1005 JB 1H 102K-T	T	15.0/7.8
J1	6510029530	S.CON	AXK6F12347YG	B	5.0/8.9

Eqv.= This component is equivalent to the REF No. component listed above, and may be substituted on parts orders and repairs.

M.=Mounted side (T: Mounted on the Top side, B: Mounted on the Bottom side)
S.=Surface mount

[VCO2 UNIT]

REF NO.	PARTS NO.	DESCRIPTION	M.	H/V LOCATION
Q1	1590004070	S.TRA LDTC144EET1G <SLVJ>	T	7.5/1.3
Q27	1530003260	S.TRA 2SC5006-T1	T	16.6/5.4
Q200	1530003260	S.TRA 2SC5006-T1	T	16.4/8.9
Q201	1530003260	S.TRA 2SC5006-T1	T	5.4/7.8
Q202	1530003260	S.TRA 2SC5006-T1	T	5.6/11.0
Q308	1590004090	S.TRA LDTC114YET1G <SLVJ>	T	7.3/12.9
Q311	1530003260	S.TRA 2SC5006-T1	T	17.3/15.3
D1	1750001700	S.DIO HSC277TRF-E	T	12.3/2.5
D10	1750001610	S.VAR HVC365TRF-E	T	9.3/1.6
D11	1750000721	S.VAR HVC375BTRF-E	T	10.5/4.1
D12	1750000711	S.VAR HVC350BTRF-E	T	10.5/1.6
D53	1750002540	S.DIO LRB520G-30T1G <SLVJ>	T	8.8/6.7
D103	1750002540	S.DIO LRB520G-30T1G <SLVJ>	T	10.5/6.5
D304	1750001610	S.VAR HVC365TRF-E	T	10.7/11.4
D305	1750001610	S.VAR HVC365TRF-E	T	10.5/13.9
D306	1750001610	S.VAR HVC365TRF-E	T	9.3/12.9
D308	1750001700	S.DIO HSC277TRF-E	T	12.4/12.3
L3	6200010630	S.COI LQW18AN8N2D00D	T	15.0/1.7
L4	6200012170	S.COI MLG1608S R18J-T	T	7.6/2.9
L5	6200010630	S.COI LQW18AN8N2D00D	T	14.3/3.7
L6	6200014760	S.COI MLK1005SR22JT	T	12.4/6.3
L200	6200014760	S.COI MLK1005SR22JT	T	5.0/6.0
L201	6200013750	S.COI MLK1005SR10JT	T	4.8/9.5
L202	6200013860	S.COI MLK1005S12NJT	T	3.4/11.9
L203	6200007931	S.COI ELJRF 12NJFB *0	T	3.4/4.8
L204	6200013800	S.COI MLK1005S39NJT	T	14.8/9.0
L302	6200012170	S.COI MLG1608S R18J-T	T	7.5/14.5
L306	6200009280	S.COI LQW18AN27NG00D (LQW1608A27NG00)	T	14.3/13.5
L307	6200012050	S.COI LQW18AN24NG00D	T	15.1/11.4
R1	7030005240	S.RES ERJ2GEJ 473 X (47K)	T	11.6/3.8
R2	7030007290	S.RES ERJ2GEJ 222 X (2.2K)	T	12.5/3.8
R3	7030005040	S.RES ERJ2GEJ 472 X (4.7K)	T	13.1/1.2
R82	7030005210	S.RES ERJ2GEJ 822 X (8.2K)	T	4.9/16.4
R83	7030005050	S.RES ERJ2GEJ 103 X (10K)	T	5.0/3.6
R89	7030007290	S.RES ERJ2GEJ 222 X (2.2K)	T	3.3/16.4
R100	7030007320	S.RES ERJ2GEJ 225 X (2.2M)	T	8.0/5.2
R101	7030008270	S.RES RR0510P-104-D (100K)	T	8.3/4.0
R114	7030005820	S.RES RR0510P-103-D (10K)	T	16.8/1.2
R117	7030011000	S.RES RR0510P-392-D (3.9K)	T	14.2/6.3
R120	7030008280	S.RES ERJ2GEJ 271 X (270)	T	17.7/1.2
R126	7030005710	S.RES ERJ2GEJ 121 X (120)	T	18.0/6.7
R200	7030004980	S.RES ERJ2GEJ 101 X (100)	T	13.6/8.6
R201	7030005720	S.RES ERJ2GEJ 563 X (56K)	T	16.7/7.3
R202	7030010040	S.RES ERJ2GEJ-JPW	T	12.0/9.5
R203	7030004980	S.RES ERJ2GEJ 101 X (100)	T	10.4/9.5
R204	7030010040	S.RES ERJ2GEJ-JPW	T	10.6/8.6
R205	7030004970	S.RES ERJ2GEJ 470 X (47)	T	8.4/7.6
R206	7030005060	S.RES ERJ2GEJ 333 X (33K)	T	7.1/7.6
R207	7030004990	S.RES ERJ2GEJ 221 X (220)	T	8.8/9.5
R208	7030005070	S.RES ERJ2GEJ 683 X (68K)	T	7.2/10.8
R348	7030007320	S.RES ERJ2GEJ 225 X (2.2M)	T	7.9/16.4
R352	7030008270	S.RES RR0510P-104-D (100K)	T	7.9/15.5
R356	7030005240	S.RES ERJ2GEJ 473 X (47K)	T	11.6/13.6
R358	7030005120	S.RES ERJ2GEJ 102 X (1K)	T	12.5/13.6
R360	7030005040	S.RES ERJ2GEJ 472 X (4.7K)	T	13.1/10.9
R363	7030005820	S.RES RR0510P-103-D (10K)	T	16.5/11.2
R366	7030006010	S.RES RR0510P-472-D (4.7K)	T	15.9/15.9
R371	7030004970	S.RES ERJ2GEJ 470 X (47)	T	12.4/16.0
R372	7030008280	S.RES ERJ2GEJ 271 X (270)	T	16.5/10.3
R375	7030005710	S.RES ERJ2GEJ 121 X (120)	T	18.0/9.1
R376	7030005030	S.RES ERJ2GEJ 152 X (1.5K)	T	5.4/4.8
C1	4030016790	S.CER C1005 JB 1E 103K-T	T	14.0/2.1
C2	4030016790	S.CER C1005 JB 1E 103K-T	T	11.6/1.2
C3	4030017460	S.CER C1005 JB 1H 102K-T	T	5.1/1.5
C85	4030017460	S.CER C1005 JB 1H 102K-T	T	4.2/1.5
C98	4030016930	S.CER C1005 JB 1A 104K-T	T	6.6/4.0
C101	4030017460	S.CER C1005 JB 1H 102K-T	T	6.7/4.9
C103	4030017520	S.CER C1005 CH 1H 0R3B-T	T	9.5/3.7
C108	4030017520	S.CER C1005 CH 1H 0R3B-T	T	9.2/4.9
C118	4030017460	S.CER C1005 JB 1H 102K-T	T	15.1/6.3
C119	4030007010	S.CER C1608 CH 1H 100D-T	T	14.3/4.9
C124	4030007030	S.CER C1608 CH 1H 150J-T	T	17.0/3.7
C125	4030007010	S.CER C1608 CH 1H 100D-T	T	17.0/2.5
C126	4030017460	S.CER C1005 JB 1H 102K-T	T	11.5/6.3
C132	4030017540	S.CER C1005 CH 1H R75B-T	T	18.0/5.1
C200	4030017460	S.CER C1005 JB 1H 102K-T	T	12.4/8.3
C201	4030017400	S.CER C1005 CH 1H 220J-T	T	13.6/9.5
C202	4030017460	S.CER C1005 JB 1H 102K-T	T	8.4/11.3
C203	4030017460	S.CER C1005 JB 1H 102K-T	T	6.6/6.4
C204	4030017460	S.CER C1005 JB 1H 102K-T	T	9.0/8.6
C205	4030017460	S.CER C1005 JB 1H 102K-T	T	3.8/7.0
C206	4030017460	S.CER C1005 JB 1H 102K-T	T	6.4/9.5
C207	4030017650	S.CER C1005 CH 1H 270J-T	T	8.7/10.4
C208	4030017460	S.CER C1005 JB 1H 102K-T	T	3.0/10.5
C209	4030017570	S.CER C1005 CH 1H 040B-T	T	3.9/14.0
C210	4030017570	S.CER C1005 CH 1H 040B-T	T	3.0/14.0
C211	4030017350	S.CER C1005 CH 1H 020B-T	T	3.4/12.8
C214	4030017460	S.CER C1005 JB 1H 102K-T	T	6.0/1.5
C341	4030016930	S.CER C1005 JB 1A 104K-T	T	5.4/15.4
C345	4030017460	S.CER C1005 JB 1H 102K-T	T	6.6/16.1
C349	4030017460	S.CER C1005 JB 1H 102K-T	T	10.2/16.0
C350	4030017460	S.CER C1005 JB 1H 102K-T	T	4.8/12.9
C356	4030017520	S.CER C1005 CH 1H 0R3B-T	T	9.3/15.0
C361	4030019990	S.CER C1005 JB 1C 104K-T	T	12.2/10.9
C366	4030016930	S.CER C1005 JB 1A 104K-T	T	14.0/11.8
C368	4030007040	S.CER C1608 CH 1H 180J-T	T	14.3/14.7

[VCO2 UNIT]

REF NO.	PARTS NO.	DESCRIPTION	M.	H/V LOCATION
C374	4030017460	S.CER C1005 JB 1H 102K-T	T	11.5/16.0
C375	4030007060	S.CER C1608 CH 1H 270J-T	T	17.0/13.5
C376	4030007080	S.CER C1608 CH 1H 390J-T	T	17.0/12.3
C386	4030017340	S.CER C1005 CH 1H 010B-T	T	18.0/10.7
C389	4030017460	S.CER C1005 JB 1H 102K-T	T	13.3/16.0
C390	4030017460	S.CER C1005 JB 1H 102K-T	T	5.7/12.9
C391	4030017460	S.CER C1005 JB 1H 102K-T	T	15.0/7.8
J1	6510029530	S.CON AXK6F12347YG	B	5.0/8.9

Eqv.= This component is equivalent to the REF No. component listed above, and may be substituted on parts orders and repairs.

M.=Mounted side (T: Mounted on the Top side, B: Mounted on the Bottom side)
S.=Surface mount

[LOGIC UNIT]

REF NO.	PARTS NO.	DESCRIPTION	M.	H/V LOCATION
IC2	1120003020	S.IC MAX3221IPWR	B	53.0/45.2
IC3	1140015870	S.IC M24M01-RMN6TP	B	6.4/32.5
IC4	1130015740	S.IC S-35390A-I8T1G *0	B	92.2/12.7
IC5	1140016250	S.IC R5F56107WNBG	B	49.2/12.6
IC7	1140015870	S.IC M24M01-RMN6TP	B	36.5/7.0
IC8	1130014260	S.IC SN74LVC2GU04DCKR	B	72.7/22.9
IC9	1180003990	S.REG XC6216D332PR-G	B	72.1/18.7
IC10	6910022370	S.DC TPS62400DRCR	B	83.7/9.0
IC11	1180003970	S.REG XC6221A332NR-G	B	26.3/7.3
IC12	1180003980	S.REG XC6221A332MR-G	B	74.6/29.8
IC13	1180003970	S.REG XC6221A332NR-G	T	78.5/7.2
IC16	1130009981	S.IC TC7W53FK(TE85LF)	B	23.8/41.3
IC17	1110008210	S.IC OPA356AIDBVR	B	29.4/18.1
IC18	1140016370	S.IC TMS320C5517AZCHA20	B	18.9/21.9
IC19	1190003520	S.IC ADS7866IDBVR	B	19.4/32.1
IC20	1130017800	S.IC EN25Q40A-104GIP <MSK>	B	13.9/41.4
IC21	1130015820	S.IC SN74AUP1T17DCKR	B	7.3/9.4
IC22	1110007820	S.IC S-80929CNPF-G8ZTFG *0	B	29.0/1.6
IC24	1110008040	S.IC S-80942CLPF-G7C-TFG *0	B	81.0/15.9
IC25	1110007920	S.IC SC-1445-E2	B	31.0/27.7
IC300	1110006470	S.IC LMV324IPWR	B	52.6/37.0
IC350	1110006740	S.IC LMV358IPWR	B	52.6/30.8
IC351	1130007021	S.IC TC7S66FU(TE85LF)	B	46.4/30.3
IC390	1130015760	S.IC TC74VHC4066AFK(EK)	B	42.9/33.2
Q7	1590004070	S.TRA LDTC144EET1G <SLVJ>	B	60.5/17.7
Q8	1590004070	S.TRA LDTC144EET1G <SLVJ>	T	5.7/11.4
Q9	1590004070	S.TRA LDTC144EET1G <SLVJ>	T	5.7/9.4
Q11	1510001100	S.TRA 2SA1832-GR(TE85RF)	B	75.1/22.4
Q12	1530003990	S.TRA 2SC4738-BL(TE85LF)	B	68.7/37.5
Q13	1530004000	S.TRA 2SC4738-GR(TE85LF)	B	72.4/27.2
Q19	1590004050	S.TRA LDTA144EET1G <SLVJ>	B	35.9/14.9
Q20	1510001100	S.TRA 2SA1832-GR(TE85RF)	B	91.1/36.8
Q21	1590004100	S.TRA LDTC144TET1G <SLVJ>	B	82.2/42.6
Q23	1560001730	S.FET RUE002N02 TL	B	30.3/46.4
Q24	1590004250	S.TRA DRC9143Z0L	B	25.0/47.3
Q25	1560001360	S.FET 2SK3019 TL	B	41.1/19.2
Q26	1590004070	S.TRA LDTC144EET1G <SLVJ>	B	82.9/15.6
Q27	1590004050	S.TRA LDTA144EET1G <SLVJ>	B	78.2/16.8
Q29	1550000370	S.FET RSM002P03T2L	B	75.7/16.6
Q300	1590004070	S.TRA LDTC144EET1G <SLVJ>	B	46.7/41.7
Q301	1590004060	S.TRA LDTC114EET1G <SLVJ>	B	47.3/33.5
Q302	1590004070	S.TRA LDTC144EET1G <SLVJ>	B	49.8/41.7
Q330	1590004390	S.TRA DMG504010R	B	65.4/32.6
Q350	1590004060	S.TRA LDTC114EET1G <SLVJ>	B	51.2/26.3
Q360	1590004610	S.TRA DMA561050R	B	64.1/21.1
Q370	1590004390	S.TRA DMG504010R	B	63.4/26.0
Q380	1590004070	S.TRA LDTC144EET1G <SLVJ>	B	6.1/13.7
Q390	1590004070	S.TRA LDTC144EET1G <SLVJ>	T	43.9/34.9
D1	1750001810	S.DIO L1SS400T1G <SLVJ>	T	50.6/33.4
D2	1750001810	S.DIO L1SS400T1G <SLVJ>	T	63.4/33.1
D3	1750001810	S.DIO L1SS400T1G <SLVJ>	T	65.2/18.7
D4	1750001810	S.DIO L1SS400T1G <SLVJ>	T	63.4/16.3
D5	1750001810	S.DIO L1SS400T1G <SLVJ> [EUR]	B	43.2/20.1
	1750001810	S.DIO L1SS400T1G <SLVJ> [UK]		
	1750001810	S.DIO L1SS400T1G <SLVJ> [USA]		
	1750001810	S.DIO L1SS400T1G <SLVJ> [KOR]		
	1750001810	S.DIO L1SS400T1G <SLVJ> [EXP]		
	1750001810	S.DIO L1SS400T1G <SLVJ> [EXP-01]		
	1750001810	S.DIO L1SS400T1G <SLVJ> [CHN]		
	1750001810	S.DIO L1SS400T1G <SLVJ> [EUR-01]		
	1750001810	S.DIO L1SS400T1G <SLVJ> [USA-01]		
	1750001810	S.DIO L1SS400T1G <SLVJ> [EUR-02]		
	1750001810	S.DIO L1SS400T1G <SLVJ> [USA-02]		
	1750001810	S.DIO L1SS400T1G <SLVJ> [EUR-03]		
	1750001810	S.DIO L1SS400T1G <SLVJ> [USA-03]		
	1750001810	S.DIO L1SS400T1G <SLVJ> [EUR-04]		
	1750001810	S.DIO L1SS400T1G <SLVJ> [USA-04]		
	1750001810	S.DIO L1SS400T1G <SLVJ> [EUR-05]		
	1750001810	S.DIO L1SS400T1G <SLVJ> [USA-05]		
	1750001810	S.DIO L1SS400T1G <SLVJ> [EUR-06]		
	1750001810	S.DIO L1SS400T1G <SLVJ> [UK-06]		
	1750001810	S.DIO L1SS400T1G <SLVJ> [USA-06]		
	1750001810	S.DIO L1SS400T1G <SLVJ> [CHN-06]		
D6	1750001810	S.DIO L1SS400T1G <SLVJ> [UK]	B	43.2/22.5
	1750001810	S.DIO L1SS400T1G <SLVJ> [ITR]		
	1750001810	S.DIO L1SS400T1G <SLVJ> [EXP-01]		
	1750001810	S.DIO L1SS400T1G <SLVJ> [UK-06]		
D7	1750001810	S.DIO L1SS400T1G <SLVJ> [EUR]	B	43.2/23.7
	1750001810	S.DIO L1SS400T1G <SLVJ> [ITR]		
	1750001810	S.DIO L1SS400T1G <SLVJ> [KOR]		
	1750001810	S.DIO L1SS400T1G <SLVJ> [EXP-01]		
	1750001810	S.DIO L1SS400T1G <SLVJ> [CHN]		
	1750001810	S.DIO L1SS400T1G <SLVJ> [EUR-01]		
	1750001810	S.DIO L1SS400T1G <SLVJ> [EUR-02]		
	1750001810	S.DIO L1SS400T1G <SLVJ> [EUR-03]		
	1750001810	S.DIO L1SS400T1G <SLVJ> [EUR-04]		
	1750001810	S.DIO L1SS400T1G <SLVJ> [EUR-05]		
	1750001810	S.DIO L1SS400T1G <SLVJ> [EUR-06]		
	1750001810	S.DIO L1SS400T1G <SLVJ> [CHN-06]		
D8	1750001810	S.DIO L1SS400T1G <SLVJ> [EUR]	B	43.2/21.3
	1750001810	S.DIO L1SS400T1G <SLVJ> [ITR]		
	1750001810	S.DIO L1SS400T1G <SLVJ> [EXP]		
	1750001810	S.DIO L1SS400T1G <SLVJ> [CHN]		
	1750001810	S.DIO L1SS400T1G <SLVJ> [AUS]		
	1750001810	S.DIO L1SS400T1G <SLVJ> [EUR-01]		
	1750001810	S.DIO L1SS400T1G <SLVJ> [EUR-02]		
	1750001810	S.DIO L1SS400T1G <SLVJ> [EUR-03]		
	1750001810	S.DIO L1SS400T1G <SLVJ> [EUR-04]		
	1750001810	S.DIO L1SS400T1G <SLVJ> [EUR-05]		
	1750001810	S.DIO L1SS400T1G <SLVJ> [EUR-06]		
	1750001810	S.DIO L1SS400T1G <SLVJ> [CHN-06]		

[LOGIC UNIT]

REF NO.	PARTS NO.	DESCRIPTION	M.	H/V LOCATION
D9	1750001810	S.DIO L1SS400T1G <SLVJ> [EUR]	T	63.4/17.9
	1750001810	S.DIO L1SS400T1G <SLVJ> [ITR]		
	1750001810	S.DIO L1SS400T1G <SLVJ> [KOR]		
	1750001810	S.DIO L1SS400T1G <SLVJ> [CHN]		
	1750001810	S.DIO L1SS400T1G <SLVJ> [EUR-01]		
	1750001810	S.DIO L1SS400T1G <SLVJ> [EUR-02]		
	1750001810	S.DIO L1SS400T1G <SLVJ> [EUR-03]		
	1750001810	S.DIO L1SS400T1G <SLVJ> [EUR-04]		
	1750001810	S.DIO L1SS400T1G <SLVJ> [EUR-05]		
	1750001810	S.DIO L1SS400T1G <SLVJ> [EUR-06]		
	1750001810	S.DIO L1SS400T1G <SLVJ> [CHN-06]		
D10	1750001810	S.DIO L1SS400T1G <SLVJ> [EUR]	T	50.6/32.2
	1750001810	S.DIO L1SS400T1G <SLVJ> [UK]		
	1750001810	S.DIO L1SS400T1G <SLVJ> [ITR]		
	1750001810	S.DIO L1SS400T1G <SLVJ> [USA]		
	1750001810	S.DIO L1SS400T1G <SLVJ> [KOR]		
	1750001810	S.DIO L1SS400T1G <SLVJ> [EXP-01]		
	1750001810	S.DIO L1SS400T1G <SLVJ> [CHN]		
	1750001810	S.DIO L1SS400T1G <SLVJ> [AUS]		
	1750001810	S.DIO L1SS400T1G <SLVJ> [EUR-01]		
	1750001810	S.DIO L1SS400T1G <SLVJ> [USA-01]		
	1750001810	S.DIO L1SS400T1G <SLVJ> [EUR-02]		
	1750001810	S.DIO L1SS400T1G <SLVJ> [USA-02]		
	1750001810	S.DIO L1SS400T1G <SLVJ> [EUR-03]		
	1750001810	S.DIO L1SS400T1G <SLVJ> [USA-03]		
	1750001810	S.DIO L1SS400T1G <SLVJ> [EUR-04]		
	1750001810	S.DIO L1SS400T1G <SLVJ> [USA-04]		
	1750001810	S.DIO L1SS400T1G <SLVJ> [EUR-05]		
	1750001810	S.DIO L1SS400T1G <SLVJ> [USA-05]		
	1750001810	S.DIO L1SS400T1G <SLVJ> [EUR-06]		
	1750001810	S.DIO L1SS400T1G <SLVJ> [UK-06]		
	1750001810	S.DIO L1SS400T1G <SLVJ> [USA-06]		
	1750001810	S.DIO L1SS400T1G <SLVJ> [CHN-06]		
D11	1750001810	S.DIO L1SS400T1G <SLVJ> [EUR]	T	63.4/31.6
	1750001810	S.DIO L1SS400T1G <SLVJ> [UK]		
	1750001810	S.DIO L1SS400T1G <SLVJ> [ITR]		
	1750001810	S.DIO L1SS400T1G <SLVJ> [USA]		
	1750001810	S.DIO L1SS400T1G <SLVJ> [KOR]		
	1750001810	S.DIO L1SS400T1G <SLVJ> [EXP-01]		
	1750001810	S.DIO L1SS400T1G <SLVJ> [CHN]		
	1750001810	S.DIO L1SS400T1G <SLVJ> [AUS]		
	1750001810	S.DIO L1SS400T1G <SLVJ> [EUR-01]		
	1750001810	S.DIO L1SS400T1G <SLVJ> [USA-01]		
	1750001810	S.DIO L1SS400T1G <SLVJ> [EUR-02]		
	1750001810	S.DIO L1SS400T1G <SLVJ> [USA-02]		
	1750001810	S.DIO L1SS400T1G <SLVJ> [EUR-03]		
	1750001810	S.DIO L1SS400T1G <SLVJ> [USA-03]		
	1750001810	S.DIO L1SS400T1G <SLVJ> [EUR-04]		
	1750001810	S.DIO L1SS400T1G <SLVJ> [USA-04]		
	1750001810	S.DIO L1SS400T1G <SLVJ> [EUR-05]		
	1750001810	S.DIO L1SS400T1G <SLVJ> [USA-05]		
	1750001810	S.DIO L1SS400T1G <SLVJ> [EUR-06]		
	1750001810	S.DIO L1SS400T1G <SLVJ> [UK-06]		
	1750001810	S.DIO L1SS400T1G <SLVJ> [USA-06]		
	1750001810	S.DIO L1SS400T1G <SLVJ> [CHN-06]		
D12	1750001810	S.DIO L1SS400T1G <SLVJ> [EUR-01]	T	50.5/17.6
	1750001810	S.DIO L1SS400T1G <SLVJ> [USA-01]		
	1750001810	S.DIO L1SS400T1G <SLVJ> [EUR-02]		
	1750001810	S.DIO L1SS400T1G <SLVJ> [USA-02]		
	1750001810	S.DIO L1SS400T1G <SLVJ> [EUR-03]		
	1750001810	S.DIO L1SS400T1G <SLVJ> [USA-03]		
	1750001810	S.DIO L1SS400T1G <SLVJ> [EUR-04]		
	1750001810	S.DIO L1SS400T1G <SLVJ> [USA-04]		
	1750001810	S.DIO L1SS400T1G <SLVJ> [EUR-05]		
	1750001810	S.DIO L1SS400T1G <SLVJ> [USA-05]		
D13	1750002540	S.DIO LRB520G-30T1G <SLVJ>	B	51.9/23.7
D14	1750002540	S.DIO LRB520G-30T1G <SLVJ>	B	52.9/23.7
D15	1750002540	S.DIO LRB520G-30T1G <SLVJ>	B	56.1/22.1
D16	1750001810	S.DIO L1SS400T1G <SLVJ>	B	91.8/10.3
D17	1750002540	S.DIO LRB520G-30T1G <SLVJ>	B	55.0/24.0
D18	1750000771	S.VAR HVC376BTRF-E	B	57.5/8.2
D20	1750001810	S.DIO L1SS400T1G <SLVJ>	B	75.5/18.7
D21	1750001810	S.DIO L1SS400T1G <SLVJ>	B	74.0/25.9
D22	1750001970	S.ZEN DZ2J082M0L	B	61.3/39.5
D23	1750002020	S.DIO DA2S10100L	B	70.0/26.7
D24	1750001810	S.DIO L1SS400T1G <SLVJ>	B	59.8/39.1
D26	1750002540	S.DIO LRB520G-30T1G <SLVJ>	B	76.3/15.1
D31	1790001850	S.VAR VC040205X150WP	B	85.2/42.2
D33	1790001960	S.VAR VC060303A100RP	T	28.7/48.0
D34	1750002540	S.DIO LRB520G-30T1G <SLVJ>	B	39.4/19.3
D35	1750002540	S.DIO LRB520G-30T1G <SLVJ>	B	39.4/16.1
D40	1790001960	S.VAR VC060303A100RP	T	44.3/40.0
D180	1750001810	S.DIO L1SS400T1G <SLVJ>	B	29.5/36.5
D181	1750001810	S.DIO L1SS400T1G <SLVJ>	B	29.5/37.7
X1	6050013250	S.XTA CR-925 (NX3215SA 32.768kHz)	B	92.5/15.4
X2	6050013260	S.XTA CR-924 XRCJH 12.288 MHz*R	B	58.5/12.5
X3	6050013170	S.XTA CR-914 TTS18VSE-A11 12.288 MHz	B	34.9/17.8
L1	6200014260	S.COI LQM2MPN2R2NG0L	B	87.5/7.1
L2	6200014260	S.COI LQM2MPN2R2NG0L	B	80.2/7.0
L3	6200014260	S.COI LQM2MPN2R2NG0L	B	80.2/11.3
L4	6200013920	S.COI MLK1005S3N9ST	B	28.5/22.9
R2	7030005090	S.RES ERJ2GEJ 104 X (100K)	B	5.3/9.7
R4	7030005090	S.RES ERJ2GEJ 104 X (100K)	B	8.7/23.2
R5	7030005120	S.RES ERJ2GEJ 102 X (1K)	B	41.6/16.8
R6	7030005090	S.RES ERJ2GEJ 104 X (100K)	B	7.7/6.0
R7	7030010040	S.RES ERJ2GEJ-JPW	B	4.9/29.2
R8	7030005240	S.RES ERJ2GEJ 473 X (47K)	T	75.3/4.7
R9	7030005090	S.RES ERJ2GEJ 104 X (100K)	B	8.0/21.0

Eqv.= This component is equivalent to the REF No. component listed above, and may be substituted on parts orders and repairs.

M.=Mounted side (T: Mounted on the Top side, B: Mounted on the Bottom side)
S.=Surface mount

[LOGIC UNIT]

REF NO.	PARTS NO.	DESCRIPTION	M.	H/V LOCATION
R10	7030005240	S.RES ERJ2GEJ 473 X (47K)	T	75.1/7.7
R11	7030005240	S.RES ERJ2GEJ 473 X (47K)	T	75.3/5.6
R12	7030005240	S.RES ERJ2GEJ 473 X (47K)	T	75.3/6.5
R13	7030005240	S.RES ERJ2GEJ 473 X (47K)	T	75.3/3.7
R14	7030004980	S.RES ERJ2GEJ 101 X (100)	B	61.1/45.0
R15	7030010040	S.RES ERJ2GEJ-JPW	B	8.9/21.0
R16	7030005570	S.RES ERJ2GEJ 820 X (82)	T	18.5/48.1
R17	7030009280	S.RES ERJ2GEJ 391 X	T	43.9/9.7
R18	7030009160	S.RES ERJ2GEJ 181 X (180)	B	28.5/47.7
R19	7030005570	S.RES ERJ2GEJ 820 X (82)	T	30.4/48.2
R20	7030005090	S.RES ERJ2GEJ 104 X (100K)	B	55.2/22.7
R21	7030004980	S.RES ERJ2GEJ 101 X (100)	B	61.1/45.9
R22	7030005570	S.RES ERJ2GEJ 820 X (82)	T	27.0/48.1
R23	7030009280	S.RES ERJ2GEJ 391 X	T	43.9/8.8
R24	7030007270	S.RES ERJ2GEJ 151 X (150)	B	26.7/48.1
R25	7030009280	S.RES ERJ2GEJ 391 X	T	43.9/42.7
R26	7030005120	S.RES ERJ2GEJ 102 X (1K)	B	59.6/23.8
R27	7030009280	S.RES ERJ2GEJ 391 X	T	44.0/41.7
R28	7030005120	S.RES ERJ2GEJ 102 X (1K)	B	54.3/22.7
R29	7030005090	S.RES ERJ2GEJ 104 X (100K)	B	48.3/43.4
R30	7030005090	S.RES ERJ2GEJ 104 X (100K)	B	48.3/44.3
R31	7030005120	S.RES ERJ2GEJ 102 X (1K)	B	53.3/21.3
R32	7030005120	S.RES ERJ2GEJ 102 X (1K)	B	63.5/17.9
R33	7030007290	S.RES ERJ2GEJ 222 X (2.2K)	B	9.7/36.2
R34	7030007290	S.RES ERJ2GEJ 222 X (2.2K)	B	8.6/36.2
R35	7030005240	S.RES ERJ2GEJ 473 X (47K)	B	56.8/19.1
R36	7030005090	S.RES ERJ2GEJ 104 X (100K)	B	48.2/22.9
R37	7030005120	S.RES ERJ2GEJ 102 X (1K)	B	50.6/22.5
R38	7030005120	S.RES ERJ2GEJ 102 X (1K)	B	46.1/23.0
R39	7030005120	S.RES ERJ2GEJ 102 X (1K)	B	59.5/21.0
R40	7030005120	S.RES ERJ2GEJ 102 X (1K)	T	43.9/22.5
R41	7030005120	S.RES ERJ2GEJ 102 X (1K)	B	48.2/23.8
R42	7030005120	S.RES ERJ2GEJ 102 X (1K)	B	47.7/20.4
R43	7030005120	S.RES ERJ2GEJ 102 X (1K)	B	49.4/22.4
R44	7030005120	S.RES ERJ2GEJ 102 X (1K)	B	50.2/20.4
R45	7030005240	S.RES ERJ2GEJ 473 X (47K)	B	49.0/20.9
R46	7030005160	S.RES ERJ2GEJ 105 X (1M)	B	46.5/20.9
R47	7030005050	S.RES ERJ2GEJ 103 X (10K)	T	15.1/2.3
R48	7030005050	S.RES ERJ2GEJ 103 X (10K)	T	29.2/1.9
R49	7030005050	S.RES ERJ2GEJ 103 X (10K)	T	20.1/2.3
R50	7030005120	S.RES ERJ2GEJ 102 X (1K)	B	51.5/21.3
R51	7030005050	S.RES ERJ2GEJ 103 X (10K)	T	17.6/2.3
R52	7030005050	S.RES ERJ2GEJ 103 X (10K)	T	12.5/2.3
R53	7030005050	S.RES ERJ2GEJ 103 X (10K)	B	88.1/16.0
R54	7030005090	S.RES ERJ2GEJ 104 X (100K)	B	63.1/16.7
R55	7030005050	S.RES ERJ2GEJ 103 X (10K)	T	25.9/2.3
R56	7030005090	S.RES ERJ2GEJ 104 X (100K)	T	88.2/8.6
R57	7030005050	S.RES ERJ2GEJ 103 X (10K)	T	22.5/2.3
R58	7030005050	S.RES ERJ2GEJ 103 X (10K)	T	28.2/1.9
R59	7030005040	S.RES ERJ2GEJ 472 X (4.7K)	B	90.2/10.8
R60	7030005240	S.RES ERJ2GEJ 473 X (47K)	B	90.1/12.1
R61	7030005240	S.RES ERJ2GEJ 473 X (47K)	B	90.1/13.0
R62	7030005120	S.RES ERJ2GEJ 102 X (1K)	B	88.1/15.1
R63	7030005120	S.RES ERJ2GEJ 102 X (1K)	B	56.5/24.4
R64	7030005120	S.RES ERJ2GEJ 102 X (1K)	B	55.7/25.9
R65	7030008260	S.RES RR0510P-393-D (39K)	B	58.5/18.2
R66	7030005090	S.RES ERJ2GEJ 104 X (100K)	B	57.3/25.9
R67	7030005160	S.RES ERJ2GEJ 105 X (1M)	B	60.5/23.0
R68	7030008410	S.RES ERJ2GEJ 392 X (3.9K)	B	56.8/18.2
R69	7030005050	S.RES ERJ2GEJ 103 X (10K)	B	29.0/2.9
R70	7510001770	S.THE NTCG10 4LH 473JT	T	43.9/24.3
R71	7030010080	S.RES ERJ2RHD 1003X (100K)	T	43.9/23.4
R72	7030007270	S.RES ERJ2GEJ 151 X (150)	T	5.4/7.1
R73	7030007280	S.RES ERJ2GEJ 331 X (330)	T	5.4/8.0
R74	7030005530	S.RES ERJ2GEJ 100 X (10)	B	56.8/14.9
R75	7030005160	S.RES ERJ2GEJ 105 X (1M)	B	56.5/13.0
R76	7030005090	S.RES ERJ2GEJ 104 X (100K)	B	57.1/7.1
R77	7030008010	S.RES ERJ2GEJ 123 X (12K)	B	56.0/4.7
R79	7030005240	S.RES ERJ2GEJ 473 X (47K)	T	43.9/12.6
R80	7030005240	S.RES ERJ2GEJ 473 X (47K)	B	41.6/13.8
R84	7030004980	S.RES ERJ2GEJ 101 X (100)	B	53.8/5.1
R88	7030005090	S.RES ERJ2GEJ 104 X (100K)	B	70.8/22.9
R90	7030005090	S.RES ERJ2GEJ 104 X (100K)	B	69.0/22.9
R94	7030005240	S.RES ERJ2GEJ 473 X (47K)	B	38.3/2.4
R95	7030005040	S.RES ERJ2GEJ 472 X (4.7K)	B	38.3/3.3
R97	7030005240	S.RES ERJ2GEJ 473 X (47K)	B	76.0/21.0
R98	7030005090	S.RES ERJ2GEJ 104 X (100K)	B	70.8/35.6
R99	7030005120	S.RES ERJ2GEJ 102 X (1K)	B	70.8/36.5
R100	7030005820	S.RES RR0510P-103-D (10K)	B	75.1/24.0
R101	7030011880	S.RES RR0510P-183-D (18K)	B	72.9/25.5
R102	7030005240	S.RES ERJ2GEJ 473 X (47K)	B	67.0/37.7
R103	7030005050	S.RES ERJ2GEJ 103 X (10K)	B	63.9/37.3
R104	7030008010	S.RES ERJ2GEJ 123 X (12K)	B	72.0/25.5
R105	7030005120	S.RES ERJ2GEJ 102 X (1K)	B	71.0/25.5
R107	7030010010	S.RES ERJ2RKF 334 X (330K)	B	59.8/41.2
R108	7030007610	S.RES RR0510P-683-D (68K)	B	58.4/41.5
R109	7030005230	S.RES ERJ2GEJ 334 X (330K)	B	28.7/42.1
R111	7030005240	S.RES ERJ2GEJ 473 X (47K)	B	27.5/45.1
R112	7030005040	S.RES ERJ2GEJ 472 X (4.7K)	B	27.0/43.9
R113	7030005010	S.RES ERJ2GEJ 681 X (680)	B	28.7/43.0
R114	7030011680	S.RES ERJ2RKF 2703 (270K)	B	85.1/11.8
R115	7030012270	S.RES ERJ2RKD 1203X (120K)	B	86.0/6.5
R116	7030012270	S.RES ERJ2RKD 1203X (120K)	B	85.5/5.3
R117	7030012270	S.RES ERJ2RKD 1203X (120K)	B	84.9/6.5
R118	7030005160	S.RES ERJ2GEJ 105 X (1M)	B	25.4/43.4
R119	7030005050	S.RES ERJ2GEJ 103 X (10K)	B	23.8/44.2
R120	7030005530	S.RES ERJ2GEJ 100 X (10)	B	16.7/31.8
R121	7030010010	S.RES ERJ2RKF 334 X (330K)	B	86.4/11.5
R122	7030008310	S.RES ERJ2GEJ 564 X (560K)	B	21.1/41.0
R124	7030005240	S.RES ERJ2GEJ 473 X (47K)	B	41.9/28.9
R125	7030005120	S.RES ERJ2GEJ 102 X (1K)	B	40.3/29.8
R126	7030005100	S.RES ERJ2GEJ 154 X (150K)	B	40.3/28.9
R127	7030005240	S.RES ERJ2GEJ 473 X (47K)	B	40.3/28.0
R128	7030004980	S.RES ERJ2GEJ 101 X (100)	B	26.1/20.0
R130	7030007340	S.RES ERJ2GEJ 153 X (15K)	B	20.5/38.4

[LOGIC UNIT]

REF NO.	PARTS NO.	DESCRIPTION	M.	H/V LOCATION
R131	7030005110	S.RES ERJ2GEJ 224 X (220K)	B	21.7/36.8
R132	7030009160	S.RES ERJ2GEJ 181 X (180)	B	25.7/33.0
R133	7030005080	S.RES ERJ2GEJ 823 X (82K)	B	22.6/36.8
R134	7030007060	S.RES ERJ2GEJ 684X (680K)	B	26.6/33.0
R135	7030007350	S.RES ERJ2GEJ 393 X (39K)	B	23.5/36.8
R136	7030005070	S.RES ERJ2GEJ 683 X (68K)	B	24.4/36.8
R137	7030007290	S.RES ERJ2GEJ 222 X (2.2K)	B	45.1/28.0
R138	7030005080	S.RES ERJ2GEJ 823 X (82K)	B	23.5/38.5
R139	7030007350	S.RES ERJ2GEJ 393 X (39K)	B	22.1/43.3
R141	7030005220	S.RES ERJ2GEJ 223 X (22K)	B	41.1/26.2
R142	7030008010	S.RES ERJ2GEJ 123 X (12K)	B	41.1/27.1
R143	7030005050	S.RES ERJ2GEJ 103 X (10K)	B	43.3/26.7
R144	7030005090	S.RES ERJ2GEJ 104 X (100K)	B	39.8/33.6
R145	7030009290	S.RES ERJ2GEJ 562 X (5.6K)	B	39.8/34.5
R146	7030010040	S.RES ERJ2GEJ-JPW	B	48.3/28.1
R152	7030005120	S.RES ERJ2GEJ 102 X (1K)	B	41.8/37.7
R156	7030010040	S.RES ERJ2GEJ-JPW	B	22.9/9.4
R159	7030005030	S.RES ERJ2GEJ 152 X (1.5K)	B	41.4/36.4
R161	7030005090	S.RES ERJ2GEJ 104 X (100K)	B	21.4/27.9
R162	7030005120	S.RES ERJ2GEJ 102 X (1K)	B	21.9/31.7
R163	7030005090	S.RES ERJ2GEJ 104 X (100K)	B	21.9/32.6
R164	7030005090	S.RES ERJ2GEJ 104 X (100K)	B	24.9/21.5
R165	7030005120	S.RES ERJ2GEJ 102 X (1K)	B	12.9/23.8
R167	7030005090	S.RES ERJ2GEJ 104 X (100K)	B	17.8/29.5
R168	7030010040	S.RES ERJ2GEJ-JPW	B	14.6/15.8
R169	7030010040	S.RES ERJ2GEJ-JPW	B	20.0/14.2
R172	7030005090	S.RES ERJ2GEJ 104 X (100K)	B	17.3/15.8
R173	7030005090	S.RES ERJ2GEJ 104 X (100K)	B	16.4/15.8
R174	7030005050	S.RES ERJ2GEJ 103 X (10K)	B	32.5/33.6
R176	7030005090	S.RES ERJ2GEJ 104 X (100K)	B	19.6/27.9
R178	7030005120	S.RES ERJ2GEJ 102 X (1K)	B	12.9/25.4
R179	7030005240	S.RES ERJ2GEJ 473 X (47K)	B	12.9/17.4
R181	7030005160	S.RES ERJ2GEJ 105 X (1M)	B	30.9/39.8
R182	7030005120	S.RES ERJ2GEJ 102 X (1K)	B	18.7/29.5
R183	7030005120	S.RES ERJ2GEJ 102 X (1K)	B	20.5/29.5
R184	7030005100	S.RES ERJ2GEJ 154 X (150K)	B	29.2/38.9
R185	7030005120	S.RES ERJ2GEJ 102 X (1K)	B	26.3/36.8
R186	7030005050	S.RES ERJ2GEJ 103 X (10K)	B	25.8/38.0
R187	7030010040	S.RES ERJ2GEJ-JPW	B	20.0/15.8
R188	7030005090	S.RES ERJ2GEJ 104 X (100K)	B	21.4/29.5
R189	7030004980	S.RES ERJ2GEJ 101 X (100)	B	24.9/17.3
R190	7030007290	S.RES ERJ2GEJ 222 X (2.2K)	B	30.4/42.4
R191	7030010040	S.RES ERJ2GEJ-JPW	B	34.1/33.6
R192	7030007300	S.RES ERJ2GEJ 332 X (3.3K)	B	27.2/15.9
R193	7030005000	S.RES ERJ2GEJ 471 X (470)	B	31.6/16.1
R194	7030010040	S.RES ERJ2GEJ-JPW	B	26.6/18.7
R195	7030005240	S.RES ERJ2GEJ 473 X (47K)	B	31.6/18.5
R196	7030005240	S.RES ERJ2GEJ 473 X (47K)	B	29.9/20.3
R197	7030007340	S.RES ERJ2GEJ 153 X (15K)	B	35.9/32.0
R198	7030004990	S.RES ERJ2GEJ 221 X (220)	B	30.9/43.6
R199	7030005090	S.RES ERJ2GEJ 104 X (100K)	B	24.9/25.4
R200	7030005240	S.RES ERJ2GEJ 473 X (47K)	B	34.0/19.8
R204	7030004970	S.RES ERJ2GEJ 470 X (47)	B	28.1/15.6
R205	7030007340	S.RES ERJ2GEJ 153 X (15K)	B	36.4/33.2
R206	7030005090	S.RES ERJ2GEJ 104 X (100K)	B	24.9/26.3
R215	7030005090	S.RES ERJ2GEJ 104 X (100K)	B	16.9/27.9
R217	7030005240	S.RES ERJ2GEJ 473 X (47K)	B	10.4/41.5
R219	7030005240	S.RES ERJ2GEJ 473 X (47K)	B	34.4/15.3
R221	7030005090	S.RES ERJ2GEJ 104 X (100K)	B	15.1/27.9
R222	7030005240	S.RES ERJ2GEJ 473 X (47K)	B	10.4/40.5
R224	7030005240	S.RES ERJ2GEJ 473 X (47K)	B	13.4/36.8
R225	7030005040	S.RES ERJ2GEJ 472 X (4.7K)	B	14.2/27.9
R226	7030005120	S.RES ERJ2GEJ 102 X (1K)	B	32.3/13.8
R227	7030007300	S.RES ERJ2GEJ 332 X (3.3K)	B	86.9/42.2
R228	7030007290	S.RES ERJ2GEJ 222 X (2.2K)	B	90.1/38.9
R229	7030005240	S.RES ERJ2GEJ 473 X (47K)	B	14.3/36.8
R230	7030005040	S.RES ERJ2GEJ 472 X (4.7K)	B	13.3/27.9
R231	7030005120	S.RES ERJ2GEJ 102 X (1K)	B	12.9/22.0
R232	7030005050	S.RES ERJ2GEJ 103 X (10K)	B	91.3/38.4
R233	7030005120	S.RES ERJ2GEJ 102 X (1K)	B	12.9/21.1
R234	7030005110	S.RES ERJ2GEJ 224 X (220K)	B	92.1/34.9
R235	7030005050	S.RES ERJ2GEJ 103 X (10K)	B	12.9/22.9
R236	7030005090	S.RES ERJ2GEJ 104 X (100K)	B	16.0/27.9
R237	7030010040	S.RES ERJ2GEJ-JPW	B	86.9/44.0
R238	7030005090	S.RES ERJ2GEJ 104 X (100K)	B	20.5/27.9
R239	7030007290	S.RES ERJ2GEJ 222 X (2.2K)	B	86.9/43.1
R240	7030005040	S.RES ERJ2GEJ 472 X (4.7K)	B	17.8/27.9
R241	7030005000	S.RES ERJ2GEJ 471 X (470)	B	93.6/34.3
R242	7030005220	S.RES ERJ2GEJ 223 X (22K)	B	85.2/43.1
R244	7030007320	S.RES ERJ2GEJ 225 X (2.2M)	B	41.2/20.6
R246	7030005090	S.RES ERJ2GEJ 104 X (100K)	B	15.5/15.8
R247	7030005090	S.RES ERJ2GEJ 104 X (100K)	B	18.7/27.9
R248	7030005090	S.RES ERJ2GEJ 104 X (100K)	B	22.3/27.9
R249	7030005090	S.RES ERJ2GEJ 104 X (100K)	B	24.9/23.4
R250	7030005090	S.RES ERJ2GEJ 104 X (100K)	B	24.9/22.5
R251	7030005090	S.RES ERJ2GEJ 104 X (100K)	B	24.9/24.3
R254	7030005240	S.RES ERJ2GEJ 473 X (47K)	B	78.8/9.0
R255	7030010040	S.RES ERJ2GEJ-JPW	B	66.6/17.2
R260	7030005090	S.RES ERJ2GEJ 104 X (100K)	B	24.9/28.1
R261	7030005090	S.RES ERJ2GEJ 104 X (100K)	B	25.3/31.4
R262	7030005090	S.RES ERJ2GEJ 104 X (100K)	B	24.9/30.1
R263	7030005090	S.RES ERJ2GEJ 104 X (100K)	B	23.7/29.5
R264	7030005090	S.RES ERJ2GEJ 104 X (100K)	B	9.1/11.1
R265	7030005090	S.RES ERJ2GEJ 104 X (100K)	B	21.8/15.8
R266	7030005090	S.RES ERJ2GEJ 104 X (100K)	B	14.6/14.2
R267	7030005090	S.RES ERJ2GEJ 104 X (100K)	B	21.8/14.2
R268	7030005090	S.RES ERJ2GEJ 104 X (100K)	B	15.5/14.2
R269	7030010040	S.RES ERJ2GEJ-JPW	B	24.9/20.6
R270	7030005120	S.RES ERJ2GEJ 102 X (1K)	B	12.9/19.3
R271	7030005090	S.RES ERJ2GEJ 104 X (100K)	B	12.9/18.3
R272	7030005120	S.RES ERJ2GEJ 102 X (1K)	B	12.9/20.2
R273	7030012260	S.RES ERJ2RKD 4703X (470K)	B	40.4/16.3
R274	7030012260	S.RES ERJ2RKD 4703X (470K)	B	40.0/17.7
R278	7030008310	S.RES ERJ2GEJ 564 X (560K)	B	57.9/17.3
R279	7030010040	S.RES ERJ2GEJ-JPW	B	59.3/15.2

Eqv.= This component is equivalent to the REF No. component listed above, and may be substituted on parts orders and repairs.

M.=Mounted side (T: Mounted on the Top side, B: Mounted on the Bottom side)
S.=Surface mount

[LOGIC UNIT]

REF NO.	PARTS NO.	DESCRIPTION	M.	H/V LOCATION
R281	7030003860	S.RES ERJ3GE JPW V	B	77.9/12.3
R284	7030005050	S.RES ERJ2GEJ 103 X (10K)	B	31.2/7.5
R285	7030005160	S.RES ERJ2GEJ 105 X (1M)	B	77.9/18.8
R300	7030008010	S.RES ERJ2GEJ 123 X (12K)	B	42.7/37.1
R303	7030005600	S.RES ERJ2GEJ 273 X (27K)	B	45.6/35.4
R304	7030005050	S.RES ERJ2GEJ 103 X (10K)	B	57.3/37.3
R305	7030005240	S.RES ERJ2GEJ 473 X (47K)	B	57.3/38.2
R306	7030005110	S.RES ERJ2GEJ 224 X (220K)	B	46.9/36.8
R307	7030005100	S.RES ERJ2GEJ 154 X (150K)	B	56.9/39.6
R308	7030005050	S.RES ERJ2GEJ 103 X (10K)	B	49.6/40.2
R309	7030012220	S.RES ERJ2GEJ 185 X (1.8M)	B	48.3/35.4
R310	7030004970	S.RES ERJ2GEJ 470 X (47)	B	57.3/36.3
R311	7030005220	S.RES ERJ2GEJ 223 X (22K)	B	50.4/33.4
R312	7030005050	S.RES ERJ2GEJ 103 X (10K)	B	55.8/40.7
R313	7030005220	S.RES ERJ2GEJ 223 X (22K)	B	51.8/33.4
R314	7030005050	S.RES ERJ2GEJ 103 X (10K)	B	54.6/40.2
R315	7030005170	S.RES ERJ2GEJ 474 X (470K)	B	48.3/38.8
R316	7030005600	S.RES ERJ2GEJ 273 X (27K)	B	54.9/33.4
R317	7030005090	S.RES ERJ2GEJ 104 X (100K)	B	51.7/40.6
R318	7030005120	S.RES ERJ2GEJ 102 X (1K)	B	46.9/39.1
R319	7030005050	S.RES ERJ2GEJ 103 X (10K)	B	46.9/38.2
R320	7030007300	S.RES ERJ2GEJ 332 X (3.3K)	B	58.0/33.0
R330	7030005070	S.RES ERJ2GEJ 683 X (68K)	B	64.6/36.0
R331	7030005070	S.RES ERJ2GEJ 683 X (68K)	B	65.5/36.0
R332	7030005070	S.RES ERJ2GEJ 683 X (68K)	B	67.3/36.0
R333	7030005160	S.RES ERJ2GEJ 105 X (1M)	B	63.3/34.6
R334	7030008410	S.RES ERJ2GEJ 392 X (3.9K)	B	66.3/30.6
R335	7030005050	S.RES ERJ2GEJ 103 X (10K)	B	67.6/31.8
R336	7030005060	S.RES ERJ2GEJ 333 X (33K)	B	59.0/36.9
R337	7030005090	S.RES ERJ2GEJ 104 X (100K)	B	68.1/30.6
R338	7030005060	S.RES ERJ2GEJ 333 X (33K)	B	67.6/34.5
R339	7030005050	S.RES ERJ2GEJ 103 X (10K)	B	60.6/36.6
R340	7030007280	S.RES ERJ2GEJ 331 X (330)	B	63.1/32.1
R341	7030005110	S.RES ERJ2GEJ 224 X (220K)	B	65.4/30.6
R342	7030008400	S.RES ERJ2GEJ 182 X (1.8K)	B	67.2/30.6
R343	7030005090	S.RES ERJ2GEJ 104 X (100K)	B	63.1/33.0
R350	7030005090	S.RES ERJ2GEJ 104 X (100K)	B	61.8/30.2
R353	7030008010	S.RES ERJ2GEJ 123 X (12K)	B	60.6/29.9
R354	7030005600	S.RES ERJ2GEJ 273 X (27K)	B	59.7/29.9
R355	7030012220	S.RES ERJ2GEJ 185 X (1.8M)	B	57.0/31.6
R356	7030005090	S.RES ERJ2GEJ 104 X (100K)	B	57.0/29.9
R357	7030005090	S.RES ERJ2GEJ 104 X (100K)	B	58.8/29.9
R358	7030005220	S.RES ERJ2GEJ 223 X (22K)	B	52.8/28.1
R359	7030005220	S.RES ERJ2GEJ 223 X (22K)	B	51.9/28.1
R360	7030005600	S.RES ERJ2GEJ 273 X (27K)	B	50.1/28.1
R361	7030007300	S.RES ERJ2GEJ 332 X (3.3K)	B	47.4/28.1
R370	7030005070	S.RES ERJ2GEJ 683 X (68K)	B	65.3/28.5
R371	7030005070	S.RES ERJ2GEJ 683 X (68K)	B	65.7/27.1
R372	7030005070	S.RES ERJ2GEJ 683 X (68K)	B	65.7/25.3
R373	7030005160	S.RES ERJ2GEJ 105 X (1M)	B	66.5/28.9
R374	7030008410	S.RES ERJ2GEJ 392 X (3.9K)	B	63.2/24.2
R375	7030005050	S.RES ERJ2GEJ 103 X (10K)	B	64.5/23.8
R376	7030005090	S.RES ERJ2GEJ 104 X (100K)	B	63.2/23.3
R377	7030005060	S.RES ERJ2GEJ 333 X (33K)	B	63.9/28.9
R378	7030007280	S.RES ERJ2GEJ 331 X (330)	B	60.3/25.2
R379	7030005110	S.RES ERJ2GEJ 224 X (220K)	B	61.5/25.4
R380	7030008400	S.RES ERJ2GEJ 182 X (1.8K)	B	61.5/28.4
R381	7030005090	S.RES ERJ2GEJ 104 X (100K)	B	60.3/26.1
R382	7030005050	S.RES ERJ2GEJ 103 X (10K)	B	61.8/29.3
R383	7030005090	S.RES ERJ2GEJ 104 X (100K)	B	58.9/28.2
R390	7030005090	S.RES ERJ2GEJ 104 X (100K)	B	61.8/34.3
R391	7030005090	S.RES ERJ2GEJ 104 X (100K)	T	43.9/36.7
R392	7030004980	S.RES ERJ2GEJ 101 X (100)	B	43.5/28.9
R393	7030008410	S.RES ERJ2GEJ 392 X (3.9K)	B	36.3/28.4
R394	7030005050	S.RES ERJ2GEJ 103 X (10K)	B	36.3/30.9
R395	7030005570	S.RES ERJ2GEJ 820 X (82)	T	43.9/30.4
R396	7030005570	S.RES ERJ2GEJ 820 X (82)	T	43.9/29.5
R397	7030005570	S.RES ERJ2GEJ 820 X (82)	T	43.9/18.2
R398	7030005570	S.RES ERJ2GEJ 820 X (82)	T	43.9/19.2
R399	7030004980	S.RES ERJ2GEJ 101 X (100)	B	27.3/46.9
R400	7030005240	S.RES ERJ2GEJ 473 X (47K)	B	48.1/5.1
R401	7030005090	S.RES ERJ2GEJ 104 X (100K)	B	63.7/19.2
R402	7030005090	S.RES ERJ2GEJ 104 X (100K)	B	65.3/19.2
R403	7030005090	S.RES ERJ2GEJ 104 X (100K)	B	75.4/27.6
R404	7030005090	S.RES ERJ2GEJ 104 X (100K)	B	71.2/31.0
R405	7030005090	S.RES ERJ2GEJ 104 X (100K)	B	41.6/11.0
R406	7030005090	S.RES ERJ2GEJ 104 X (100K)	B	41.6/11.9
R407	7030005090	S.RES ERJ2GEJ 104 X (100K)	B	41.6/12.8
R408	7030005090	S.RES ERJ2GEJ 104 X (100K)	B	41.6/15.9
R409	7030005090	S.RES ERJ2GEJ 104 X (100K)	B	46.1/5.1
R410	7030005090	S.RES ERJ2GEJ 104 X (100K)	B	41.6/14.7
R411	7030005090	S.RES ERJ2GEJ 104 X (100K)	B	47.1/5.1
R412	7030005090	S.RES ERJ2GEJ 104 X (100K)	B	45.2/20.4
R413	7030005090	S.RES ERJ2GEJ 104 X (100K)	B	26.6/31.3
R416	7030005950	S.RES RR0510P-123-D (12K)	B	86.4/12.4
R417	7030005240	S.RES ERJ2GEJ 473 X (47K)	B	30.0/48.1
R418	7030005240	S.RES ERJ2GEJ 473 X (47K)	B	21.6/39.8
R419	7030010040	S.RES ERJ2GEJ-JPW	B	48.3/45.2
C3	4550008370	S.TAN TMCJ1C105MTRF	B	6.6/15.9
C4	4550008370	S.TAN TMCJ1C105MTRF	B	4.1/19.7
C5	4550008370	S.TAN TMCJ1C105MTRF	B	3.8/17.1
C6	4030017440	S.CER C1005 CH 1H 221J-T	B	7.6/16.5
C7	4030017620	S.CER C1005 CH 1H 100C-T	B	60.6/42.9
C11	4550008370	S.TAN TMCJ1C105MTRF	B	6.6/18.7
C13	4030017440	S.CER C1005 CH 1H 221J-T	B	6.5/6.0
C15	4030017440	S.CER C1005 CH 1H 221J-T	B	3.3/29.2
C17	4030017440	S.CER C1005 CH 1H 221J-T	B	5.3/7.3
C18	4030011810	S.CER C1608 JB 1A 224K-T	B	57.8/46.5
C19	4030011810	S.CER C1608 JB 1A 224K-T	B	59.0/46.5
C20	4030011810	S.CER C1608 JB 1A 224K-T	B	58.4/44.3
C21	4030011810	S.CER C1608 JB 1A 224K-T	B	58.4/43.1
C22	4030017620	S.CER C1005 CH 1H 100C-T	B	61.5/48.0
C23	4030017460	S.CER C1005 JB 1H 102K-T	T	75.4/42.2

[LOGIC UNIT]

REF NO.	PARTS NO.	DESCRIPTION	M.	H/V LOCATION
C27	4030017460	S.CER C1005 JB 1H 102K-T	T	44.0/6.8
C28	4030019120	S.CER GRM188B31E105KA75D	T	12.8/47.9
C29	4030017400	S.CER C1005 CH 1H 220J-T	T	65.2/33.2
C31	4030017760	S.CER C1005 JB 1H 222K-T	B	59.1/22.6
C33	4030017460	S.CER C1005 JB 1H 102K-T	B	9.2/39.2
C35	4030017780	S.CER C1005 JB 1H 472K-T	B	54.6/21.4
C37	4030017730	S.CER C1005 JB 1H 471K-T	B	57.0/4.7
C38	4030017460	S.CER C1005 JB 1H 102K-T	B	9.5/42.9
C39	4030016790	S.CER C1005 JB 1E 103K-T	B	57.9/4.7
C40	4030017460	S.CER C1005 JB 1H 102K-T	B	8.5/28.9
C41	4030017460	S.CER C1005 JB 1H 102K-T	B	9.2/38.3
C43	4030016930	S.CER C1005 JB 1A 104K-T	B	48.8/47.0
C44	4030017460	S.CER C1005 JB 1H 102K-T	B	9.5/43.8
C45	4030020450	S.CER C1005 JB 0J 475M-T	B	9.4/29.1
C46	4030017780	S.CER C1005 JB 1H 472K-T	B	53.7/20.0
C47	4030017780	S.CER C1005 JB 1H 472K-T	B	62.6/17.9
C48	4030016930	S.CER C1005 JB 1A 104K-T	B	31.0/48.1
C49	4030016790	S.CER C1005 JB 1E 103K-T	B	9.0/37.4
C51	4030017780	S.CER C1005 JB 1H 472K-T	T	43.9/21.6
C52	4030017760	S.CER C1005 JB 1H 222K-T	B	46.5/20.0
C53	4030017780	S.CER C1005 JB 1H 472K-T	B	49.4/24.2
C55	4030017730	S.CER C1005 JB 1H 471K-T	B	86.3/15.5
C56	4030017780	S.CER C1005 JB 1H 472K-T	B	49.0/20.0
C58	4030017780	S.CER C1005 JB 1H 472K-T	B	45.7/21.8
C59	4030017780	S.CER C1005 JB 1H 472K-T	B	48.2/21.9
C61	4030017780	S.CER C1005 JB 1H 472K-T	B	50.6/23.4
C62	4030017780	S.CER C1005 JB 1H 472K-T	B	59.5/20.0
C64	4030017460	S.CER C1005 JB 1H 102K-T	B	55.4/20.5
C65	4030016930	S.CER C1005 JB 1A 104K-T	T	21.3/1.9
C67	4030017610	S.CER C1005 CH 1H 090C-T	B	94.0/13.5
C69	4030016930	S.CER C1005 JB 1A 104K-T	B	41.6/8.7
C72	4030017780	S.CER C1005 JB 1H 472K-T	B	54.8/25.0
C74	4030017780	S.CER C1005 JB 1H 472K-T	B	57.4/24.4
C76	4030018860	S.CER C1005 JB 0J 105K-T	B	94.0/10.8
C77	4030017460	S.CER C1005 JB 1H 102K-T	B	30.7/1.3
C78	4030018920	S.CER C1005 JB 1H 392K-T	B	59.5/19.1
C79	4030016790	S.CER C1005 JB 1E 103K-T	B	27.4/1.3
C80	4030017040	S.CER C1005 JB 1A 333K-T	B	58.0/19.5
C81	4030016930	S.CER C1005 JB 1A 104K-T	B	57.9/16.4
C83	4030017390	S.CER C1005 CH 1H 180J-T	B	58.4/15.2
C84	4030017730	S.CER C1005 JB 1H 471K-T	B	56.9/3.0
C85	4030016790	S.CER C1005 JB 1E 103K-T	B	56.0/3.0
C87	4030016790	S.CER C1005 JB 1E 103K-T	B	57.1/9.2
C88	4030016790	S.CER C1005 JB 1E 103K-T	B	58.5/9.6
C89	4030017460	S.CER C1005 JB 1H 102K-T	T	6.1/12.9
C90	4030017460	S.CER C1005 JB 1H 102K-T	T	6.6/7.5
C91	4030016930	S.CER C1005 JB 1A 104K-T	B	52.2/5.1
C94	4030016790	S.CER C1005 JB 1E 103K-T	B	40.0/3.3
C95	4030016930	S.CER C1005 JB 1A 104K-T	B	69.9/22.9
C96	4030017460	S.CER C1005 JB 1H 102K-T	B	71.2/37.7
C97	4030017460	S.CER C1005 JB 1H 102K-T	B	70.3/37.7
C98	4030019120	S.CER GRM188B31E105KA75D	B	76.7/18.7
C99	4030018860	S.CER C1005 JB 0J 105K-T	B	65.7/17.2
C100	4030017460	S.CER C1005 JB 1H 102K-T	B	66.1/37.7
C101	4550007520	S.TAN F931A106MAABMA	B	68.2/18.8
C102	4030017460	S.CER C1005 JB 1H 102K-T	B	58.4/40.6
C103	4030016930	S.CER C1005 JB 1A 104K-T	B	28.7/43.9
C104	4030019560	S.CER GRM21BB31C106KE15L	B	88.0/10.6
C105	4030017770	S.CER C1005 JB 1H 332K-T	B	26.6/45.1
C106	4030019460	S.CER C1608 JB 0J 106M-T	B	77.5/7.3
C107	4030016930	S.CER C1005 JB 1A 104K-T	B	27.0/43.0
C108	4030019120	S.CER GRM188B31E105KA75D	B	29.8/7.3
C109	4030018860	S.CER C1005 JB 0J 105K-T	B	21.1/42.6
C110	4030017660	S.CER C1005 CH 1H 330J-T	B	86.4/10.6
C111	4030019560	S.CER GRM21BB31C106KE15L	B	82.8/6.1
C113	4030018140	S.CER C1005 JB 1H 391K-T	B	41.9/28.0
C114	4030017460	S.CER C1005 JB 1H 102K-T	B	28.5/22.0
C115	4030016930	S.CER C1005 JB 1A 104K-T	B	27.9/20.8
C116	4030019120	S.CER GRM188B31E105KA75D	B	24.4/7.6
C117	4030016930	S.CER C1005 JB 1A 104K-T	B	39.8/32.7
C118	4030017420	S.CER C1005 CH 1H 470J-T	B	32.0/22.8
C120	4030019560	S.CER GRM21BB31C106KE15L	B	82.8/12.0
C121	4030018860	S.CER C1005 JB 0J 105K-T	B	36.0/23.0
C122	4030019460	S.CER C1608 JB 0J 106M-T	B	77.5/10.5
C124	4030016780	S.CER C1005 JB 1E 153K-T	B	39.8/30.9
C125	4030016930	S.CER C1005 JB 1A 104K-T	B	34.7/22.1
C126	4030017460	S.CER C1005 JB 1H 102K-T	B	33.8/22.1
C127	4030016930	S.CER C1005 JB 1A 104K-T	B	28.7/33.6
C128	4030017460	S.CER C1005 JB 1H 102K-T	B	29.8/21.3
C129	4050000240	S.FEE NFM18PC104R1C3D	B	14.5/29.4
C132	4030016930	S.CER C1005 JB 1A 104K-T	B	27.1/41.5
C134	4030016930	S.CER C1005 JB 1A 104K-T	B	21.7/7.0
C135	4030016930	S.CER C1005 JB 1A 104K-T	B	14.7/32.4
C138	4550008380	S.TAN TMCJ0J106MTRF	B	20.6/7.5
C140	4550008380	S.TAN TMCJ0J106MTRF	B	14.5/33.4
C141	4030016930	S.CER C1005 JB 1A 104K-T	B	14.7/31.5
C142	4030018110	S.CER C1005 JB 1H 272K-T	B	42.4/26.7
C143	4030017440	S.CER C1005 CH 1H 221J-T	B	27.3/23.2
C144	4030017440	S.CER C1005 CH 1H 221J-T	B	26.4/23.2
C146	4030016930	S.CER C1005 JB 1A 104K-T	B	18.2/15.8
C149	4030019460	S.CER C1608 JB 0J 106M-T	B	24.1/13.9
C151	4030018080	S.CER C1005 JB 1H 182K-T	B	24.4/38.5
C152	4030018140	S.CER C1005 JB 1H 391K-T	B	29.7/32.7
C154	4030017040	S.CER C1005 JB 1A 333K-T	B	43.5/28.0
C155	4030020120	S.CER C1005 JB 0J 225M-T	B	40.9/37.7
C156	4030018860	S.CER C1005 JB 0J 105K-T	B	36.0/23.9
C157	4030018860	S.CER C1005 JB 0J 105K-T	B	35.7/25.7
C158	4030018860	S.CER C1005 JB 0J 105K-T	B	36.6/25.7
C159	4030019560	S.CER GRM21BB31C106KE15L	B	19.5/41.8
C160	4030017040	S.CER C1005 JB 1A 333K-T	B	22.6/38.5
C161	4030017780	S.CER C1005 JB 1H 472K-T	B	20.8/36.8
C162	4030018860	S.CER C1005 JB 0J 105K-T	B	30.9/33.6
C163	4030016940	S.CER C1005 JB 1A 393K-T	B	24.5/33.4
C165	4030017510	S.CER C1005 CH 1H 680J-T	B	27.5/33.0
C166	4030018860	S.CER C1005 JB 0J 105K-T	B	23.6/15.8

Eqv.= This component is equivalent to the REF No. component listed above, and may be substituted on parts orders and repairs.

M.=Mounted side (T: Mounted on the Top side, B: Mounted on the Bottom side)
S.=Surface mount

[LOGIC UNIT]

REF NO.	PARTS NO.	DESCRIPTION	M.	H/V LOCATION
C168	4030016930	S.CER C1005 JB 1A 104K-T	B	24.9/18.2
C169	4030017420	S.CER C1005 CH 1H 470J-T	B	27.0/20.0
C171	4030017460	S.CER C1005 JB 1H 102K-T	B	23.6/43.0
C173	4030018860	S.CER C1005 JB 0J 105K-T	B	27.4/36.8
C174	4030018080	S.CER C1005 JB 1H 182K-T	B	25.4/39.2
C176	4030016930	S.CER C1005 JB 1A 104K-T	B	30.9/38.9
C177	4030016790	S.CER C1005 JB 1E 103K-T	B	26.3/39.2
C178	4030018100	S.CER C1005 JB 1H 681K-T	B	39.9/26.7
C180	4030018860	S.CER C1005 JB 0J 105K-T	B	31.3/37.3
C181	4030016930	S.CER C1005 JB 1A 104K-T	B	32.5/16.1
C182	4030018860	S.CER C1005 JB 0J 105K-T	B	36.3/29.3
C183	4030016930	S.CER C1005 JB 1A 104K-T	B	32.0/19.7
C184	4030018860	S.CER C1005 JB 0J 105K-T	B	34.6/32.4
C186	4030017460	S.CER C1005 JB 1H 102K-T	B	32.0/17.3
C187	4030017620	S.CER C1005 CH 1H 100C-T	B	32.5/18.5
C188	4030016930	S.CER C1005 JB 1A 104K-T	B	35.5/33.2
C190	4030016960	S.CER C1005 JB 1E 183K-T	B	32.8/32.7
C191	4030016790	S.CER C1005 JB 1E 103K-T	B	29.3/14.2
C195	4030017420	S.CER C1005 CH 1H 470J-T	B	30.2/14.2
C196	4030018860	S.CER C1005 JB 0J 105K-T	B	31.4/42.4
C197	4030016930	S.CER C1005 JB 1A 104K-T	B	33.5/15.3
C198	4030016930	S.CER C1005 JB 1A 104K-T	B	36.0/19.8
C199	4030016930	S.CER C1005 JB 1A 104K-T	B	31.1/14.2
C200	4030018860	S.CER C1005 JB 0J 105K-T	B	25.4/36.8
C201	4030018860	S.CER C1005 JB 0J 105K-T	B	86.4/45.3
C202	4030018860	S.CER C1005 JB 0J 105K-T	B	87.3/45.3
C203	4030017460	S.CER C1005 JB 1H 102K-T	B	88.2/44.4
C204	4030016950	S.CER C1005 JB 1A 473K-T	B	91.2/34.9
C205	4030016930	S.CER C1005 JB 1A 104K-T	B	17.2/43.6
C206	4550008160	S.TAN F931A226MAA	B	93.4/37.7
C208	4030016930	S.CER C1005 JB 1A 104K-T	B	26.4/46.9
C209	4030017460	S.CER C1005 JB 1H 102K-T	B	28.0/13.8
C210	4030017460	S.CER C1005 JB 1H 102K-T	B	14.7/30.6
C211	4030016930	S.CER C1005 JB 1A 104K-T	B	5.7/11.1
C212	4030017460	S.CER C1005 JB 1H 102K-T	B	39.8/14.5
C213	4030017460	S.CER C1005 JB 1H 102K-T	B	41.6/17.7
C214	4030018860	S.CER C1005 JB 0J 105K-T	B	26.5/1.3
C215	4030018860	S.CER C1005 JB 0J 105K-T	B	16.2/33.0
C216	4030016930	S.CER C1005 JB 1A 104K-T	B	17.1/33.0
C217	4030017780	S.CER C1005 JB 1H 472K-T	B	56.5/16.9
C218	4030017400	S.CER C1005 CH 1H 220J-T	B	16.7/30.8
C219	4030017400	S.CER C1005 CH 1H 220J-T	B	19.6/29.5
C220	4030017400	S.CER C1005 CH 1H 220J-T	B	21.9/30.8
C221	4030017400	S.CER C1005 CH 1H 220J-T	B	21.9/33.5
C222	4030017400	S.CER C1005 CH 1H 220J-T	B	16.9/29.5
C223	4030017400	S.CER C1005 CH 1H 220J-T	B	22.3/29.5
C300	4030017780	S.CER C1005 JB 1H 472K-T	B	45.6/37.2
C301	4030017460	S.CER C1005 JB 1H 102K-T	B	43.6/38.7
C302	4030017460	S.CER C1005 JB 1H 102K-T	B	45.1/41.8
C303	4030018860	S.CER C1005 JB 0J 105K-T	B	44.5/38.7
C304	4030018860	S.CER C1005 JB 0J 105K-T	B	53.0/33.4
C305	4030016930	S.CER C1005 JB 1A 104K-T	B	52.9/40.2
C306	4030018920	S.CER C1005 JB 1H 392K-T	B	46.9/35.9
C307	4030017910	S.CER C1005 JB 1H 152K-T	B	46.9/35.0
C308	4030017460	S.CER C1005 JB 1H 102K-T	B	48.3/41.8
C309	4030017460	S.CER C1005 JB 1H 102K-T	B	45.6/33.5
C310	4030018090	S.CER C1005 JB 1E 822K-T	B	49.4/33.4
C311	4030016940	S.CER C1005 JB 1A 393K-T	B	52.9/41.7
C312	4030017460	S.CER C1005 JB 1H 102K-T	B	57.7/35.1
C313	4030017790	S.CER C1005 JB 1H 682K-T	B	55.9/33.4
C314	4030018080	S.CER C1005 JB 1H 182K-T	B	54.1/41.5
C315	4030018860	S.CER C1005 JB 0J 105K-T	B	56.8/33.4
C316	4030017910	S.CER C1005 JB 1H 152K-T	B	54.0/33.4
C317	4030016790	S.CER C1005 JB 1E 103K-T	B	58.8/33.9
C330	4030016970	S.CER C1005 JB 1E 223K-T	B	66.4/36.0
C331	4030017790	S.CER C1005 JB 1H 682K-T	B	63.3/36.4
C332	4030016930	S.CER C1005 JB 1A 104K-T	B	63.3/35.5
C333	4030017760	S.CER C1005 JB 1H 222K-T	B	67.6/32.7
C334	4030018820	S.CER C1005 JB 1H 561K-T	B	58.7/35.7
C335	4030016790	S.CER C1005 JB 1E 103K-T	B	64.1/30.8
C336	4030017040	S.CER C1005 JB 1A 333K-T	B	69.3/31.0
C337	4030018080	S.CER C1005 JB 1H 182K-T	B	60.0/35.4
C338	4030019460	S.CER C1608 JB 0J 106M-T	B	65.5/34.5
C340	4030021250	S.CER C1005 JB 1A 334K-T	B	61.8/36.1
C350	4030016940	S.CER C1005 JB 1A 393K-T	B	61.8/31.1
C351	4030017780	S.CER C1005 JB 1H 472K-T	B	60.2/31.1
C352	4030017910	S.CER C1005 JB 1H 152K-T	B	58.4/32.0
C353	4030016930	S.CER C1005 JB 1A 104K-T	B	57.9/29.9
C354	4030018920	S.CER C1005 JB 1H 392K-T	B	58.4/31.1
C355	4030017460	S.CER C1005 JB 1H 102K-T	B	49.6/26.3
C356	4030018090	S.CER C1005 JB 1E 822K-T	B	52.8/26.3
C357	4030017790	S.CER C1005 JB 1H 682K-T	B	51.0/28.1
C358	4030016930	S.CER C1005 JB 1A 104K-T	B	53.8/28.1
C359	4030018860	S.CER C1005 JB 0J 105K-T	B	44.6/27.1
C360	4030017910	S.CER C1005 JB 1H 152K-T	B	49.2/28.1
C361	4030017570	S.CER C1005 CH 1H 040B-T	B	62.4/19.7
C362	4030017570	S.CER C1005 CH 1H 040B-T	B	65.8/20.5
C363	4030017460	S.CER C1005 JB 1H 102K-T	B	62.3/22.2
C364	4030017460	S.CER C1005 JB 1H 102K-T	B	66.5/22.0
C365	4030017570	S.CER C1005 CH 1H 040B-T	B	60.4/27.4
C366	4030017460	S.CER C1005 JB 1H 102K-T	B	46.0/32.1
C367	4030018860	S.CER C1005 JB 0J 105K-T	B	48.3/31.7
C370	4030016970	S.CER C1005 JB 1E 223K-T	B	65.7/26.2
C371	4030017790	S.CER C1005 JB 1H 682K-T	B	66.5/28.0
C372	4030016930	S.CER C1005 JB 1A 104K-T	B	63.9/29.8
C373	4030017760	S.CER C1005 JB 1H 222K-T	B	65.7/24.4
C374	4030016790	S.CER C1005 JB 1E 103K-T	B	61.1/24.2
C375	4030017040	S.CER C1005 JB 1A 333K-T	B	65.7/23.3
C376	4030019460	S.CER C1608 JB 0J 106M-T	B	63.6/27.9
C377	4030017760	S.CER C1005 JB 1H 222K-T	B	61.4/23.0
C378	4030017770	S.CER C1005 JB 1H 332K-T	B	58.9/27.3
C379	4030017720	S.CER C1005 JB 1H 331K-T	B	57.7/27.7
C390	4030016940	S.CER C1005 JB 1A 393K-T	B	60.9/34.3
C391	4030017460	S.CER C1005 JB 1H 102K-T	B	43.6/37.1
C392	4030017460	S.CER C1005 JB 1H 102K-T	B	44.5/37.1

[LOGIC UNIT]

REF NO.	PARTS NO.	DESCRIPTION	M.	H/V LOCATION
C393	4030017460	S.CER C1005 JB 1H 102K-T	T	43.4/32.8
C394	4030017460	S.CER C1005 JB 1H 102K-T	T	43.9/37.6
C395	4030017460	S.CER C1005 JB 1H 102K-T	B	39.8/31.8
C396	4030019120	S.CER GRM188B31E105KA75D	B	77.0/30.1
C397	4030019120	S.CER GRM188B31E105KA75D	B	72.2/29.8
C398	4030019120	S.CER GRM188B31E105KA75D	T	78.4/5.3
C399	4030019120	S.CER GRM188B31E105KA75D	T	78.3/9.1
C400	4030016790	S.CER C1005 JB 1E 103K-T	B	46.5/28.1
C502	4030017550	S.CER C1005 CH 1H 1R5B-T	B	89.7/15.4
C503	4030019460	S.CER C1608 JB 0J 106M-T	T	43.9/14.4
C504	4030019460	S.CER C1608 JB 0J 106M-T	B	64.6/17.5
C505	4030019460	S.CER C1608 JB 0J 106M-T	B	57.2/22.1
C506	4030019460	S.CER C1608 JB 0J 106M-T	B	25.4/1.7
C507	4030019460	S.CER C1608 JB 0J 106M-T	B	75.3/25.7
C508	4030019460	S.CER C1608 JB 0J 106M-T	B	69.4/24.3
C509	4030016930	S.CER C1005 JB 1A 104K-T	B	27.2/17.5
C511	4030017440	S.CER C1005 CH 1H 221J-T	B	24.4/31.4
C512	4030017440	S.CER C1005 CH 1H 221J-T	B	24.9/29.2
C513	4030017440	S.CER C1005 CH 1H 221J-T	B	23.7/27.9
C514	4030017400	S.CER C1005 CH 1H 220J-T	B	24.9/27.2
C515	4030017440	S.CER C1005 CH 1H 221J-T	B	15.3/36.8
C516	4030017440	S.CER C1005 CH 1H 221J-T	B	12.2/37.1
C517	4030016930	S.CER C1005 JB 1A 104K-T	T	82.3/8.8
C523	4030019460	S.CER C1608 JB 0J 106M-T	B	6.2/12.1
C524	4030019460	S.CER C1608 JB 0J 106M-T	B	46.7/44.2
C526	4030018860	S.CER C1005 JB 0J 105K-T	B	28.4/6.8
C527	4030016790	S.CER C1005 JB 1E 103K-T	B	79.7/16.1
C529	4030017430	S.CER C1005 CH 1H 101J-T	B	89.6/34.0
C530	4030017430	S.CER C1005 CH 1H 101J-T	B	80.0/32.6
C531	4030017440	S.CER C1005 CH 1H 221J-T	B	10.9/38.5
C532	4030017440	S.CER C1005 CH 1H 221J-T	B	12.8/26.7
C533	4030017440	S.CER C1005 CH 1H 221J-T	B	13.7/14.9
C534	4030017440	S.CER C1005 CH 1H 221J-T	B	7.8/19.4
C535	4030017440	S.CER C1005 CH 1H 221J-T	B	24.9/19.7
J2	6510028080	S.CON 27FHSY-RSM1-GAN-TB(LF)(SN)	T	4.9/24.8
J3	6510028170	S.CON SDHL-8BNS-K-363-A0-ETB(HF)	B	67.4/8.3
J4	6510024580	S.CON HSJ1621-019011	B	67.8/48.2
J5	6510028920	S.CON AXK6S50647YG	B	81.2/37.0
J271	6510028880	S.CON 04-6238-010-410-800	B	5.2/24.8
DS1	5040003550	S.LED NSSW208T [EUR]	T	16.1/48.2
	5040003550	S.LED NSSW208T [UK]		
	5040003550	S.LED NSSW208T [ITR]		
	5040003550	S.LED NSSW208T [USA]		
	5040003550	S.LED NSSW208T [KOR]		
	5040003550	S.LED NSSW208T [EXP]		
	5040003890	S.LED B1931TX--05P-000412 <KOU> [EXP-01]		
	5040003550	S.LED NSSW208T [CHN]		
	5040003550	S.LED NSSW208T [AUS]		
	5040003550	S.LED NSSW208T [EUR-01]		
	5040003550	S.LED NSSW208T [USA-01]		
	5040003550	S.LED NSSW208T [EUR-02]		
	5040003550	S.LED NSSW208T [USA-02]		
	5040003550	S.LED NSSW208T [EUR-03]		
	5040003550	S.LED NSSW208T [USA-03]		
	5040003550	S.LED NSSW208T [EUR-04]		
	5040003550	S.LED NSSW208T [USA-04]		
	5040003550	S.LED NSSW208T [EUR-05]		
	5040003550	S.LED NSSW208T [USA-05]		
	5040003550	S.LED NSSW208T [EUR-06]		
	5040003550	S.LED NSSW208T [UK-06]		
	5040003550	S.LED NSSW208T [USA-06]		
	5040003550	S.LED NSSW208T [CHN-06]		
DS2	5040003890	S.LED B1931TX--05P-000412 <KOU>	T	55.5/8.4
DS3	5040003550	S.LED NSSW208T	T	24.6/48.2
DS4	5040003890	S.LED B1931TX--05P-000412 <KOU>	T	63.8/8.4
DS5	5040003890	S.LED B1931TX--05P-000412 <KOU>	T	55.5/41.2
DS6	5040003890	S.LED B1931TX--05P-000412 <KOU>	T	63.8/41.2
DS7	5040002670	S.LED CL-165HR/YG-D-T	T	1.2/8.8
DS8	5040003890	S.LED B1931TX--05P-000412 <KOU>	T	63.4/30.3
DS9	5040003890	S.LED B1931TX--05P-000412 <KOU>	T	50.5/30.8
DS10	5040003890	S.LED B1931TX--05P-000412 <KOU>	T	50.5/18.9
DS11	5040003890	S.LED B1931TX--05P-000412 <KOU>	T	63.4/19.4
DS12	5040003550	S.LED NSSW208T	T	33.1/48.2
DS13	5030003660	LCD M1-1677TFF-4 <TES>		
MC1	7700003080	MIC F6022AP-SD <TDS>		
S1	2260003300	S.SWI EVQPQHB55	T	68.0/40.5
S2	2260003300	S.SWI EVQPQHB55	T	59.6/41.2
S3	2260003300	S.SWI EVQPQHB55	T	64.1/24.8
S4	2260003300	S.SWI EVQPQHB55	T	59.6/8.4
S5	2260003300	S.SWI EVQPQHB55	T	57.2/32.3
S6	2260003300	S.SWI EVQPQHB55	T	57.2/24.8
S7	2260003300	S.SWI EVQPQHB55	T	57.2/17.4
S8	2260003300	S.SWI EVQPQHB55	T	68.0/9.1
S9	2260003300	S.SWI EVQPQHB55	T	51.3/41.2
S10	2260003300	S.SWI EVQPQHB55	T	50.3/24.8
S11	2260003300	S.SWI EVQPQHB55	T	51.3/8.4
S12	2250000710	ENC F082EN7510W-1+C L20FX6 <SLVJ>		
S13	2260003320	S.SWI SKRTLAE010	B	51.0/2.1
S14	2260003320	S.SWI SKRTLAE010	B	34.6/2.1
BT1	3020000390	S.LIT ML414HIV01E	T	86.0/5.4

Eqv.= This component is equivalent to the REF No. component listed above, and may be substituted on parts orders and repairs.

M.=Mounted side (T: Mounted on the Top side, B: Mounted on the Bottom side)
S.=Surface mount

[MAIN UNIT]

REF NO.	PARTS NO.	DESCRIPTION	M.	H/V LOCATION
EP1	6910023920	S.BEA BLM15GA750SN1D	T	75.3/47.5
EP2	6910023920	S.BEA BLM15GA750SN1D	B	61.1/44.1
EP3	6910023920	S.BEA BLM15GA750SN1D	B	61.1/46.8
EP5	6910018460	S.BEA MMZ1005Y102C-T	B	46.9/47.0
EP6	6910021630	S.BEA BLM18RK102SN1D	B	77.9/5.4
EP9	6910021630	S.BEA BLM18RK102SN1D	B	22.5/8.4
EP10	6910021630	S.BEA BLM18RK102SN1D	B	12.6/30.2
EP12	6910016330	S.BEA MMZ1005S 601CT-S	B	21.2/9.4
EP13	6910016330	S.BEA MMZ1005S 601CT-S	B	26.9/21.6
EP14	6910021630	S.BEA BLM18RK102SN1D	B	18.3/13.9
EP19	6910016330	S.BEA MMZ1005S 601CT-S	B	29.7/15.4
EP20	6910016330	S.BEA MMZ1005S 601CT-S	B	32.3/14.8
EP22	6910018460	S.BEA MMZ1005Y102C-T	B	89.6/34.9
EP23	6910018460	S.BEA MMZ1005Y102C-T	B	81.6/33.0
EP24	6910023920	S.BEA BLM15GA750SN1D	B	83.4/32.9
EP25	6910018460	S.BEA MMZ1005Y102C-T	B	12.7/15.6

Eqv.= This component is equivalent to the REF No. component listed above, and may be substituted on parts orders and repairs.

M.=Mounted side (T: Mounted on the Top side, B: Mounted on the Bottom side)
S.=Surface mount

BOARD LAYOUTS

The combination of top side and bottom side of this page shows the actual configuration of P.C. board.

• MAIN UNIT B-7721G (TOP VIEW)

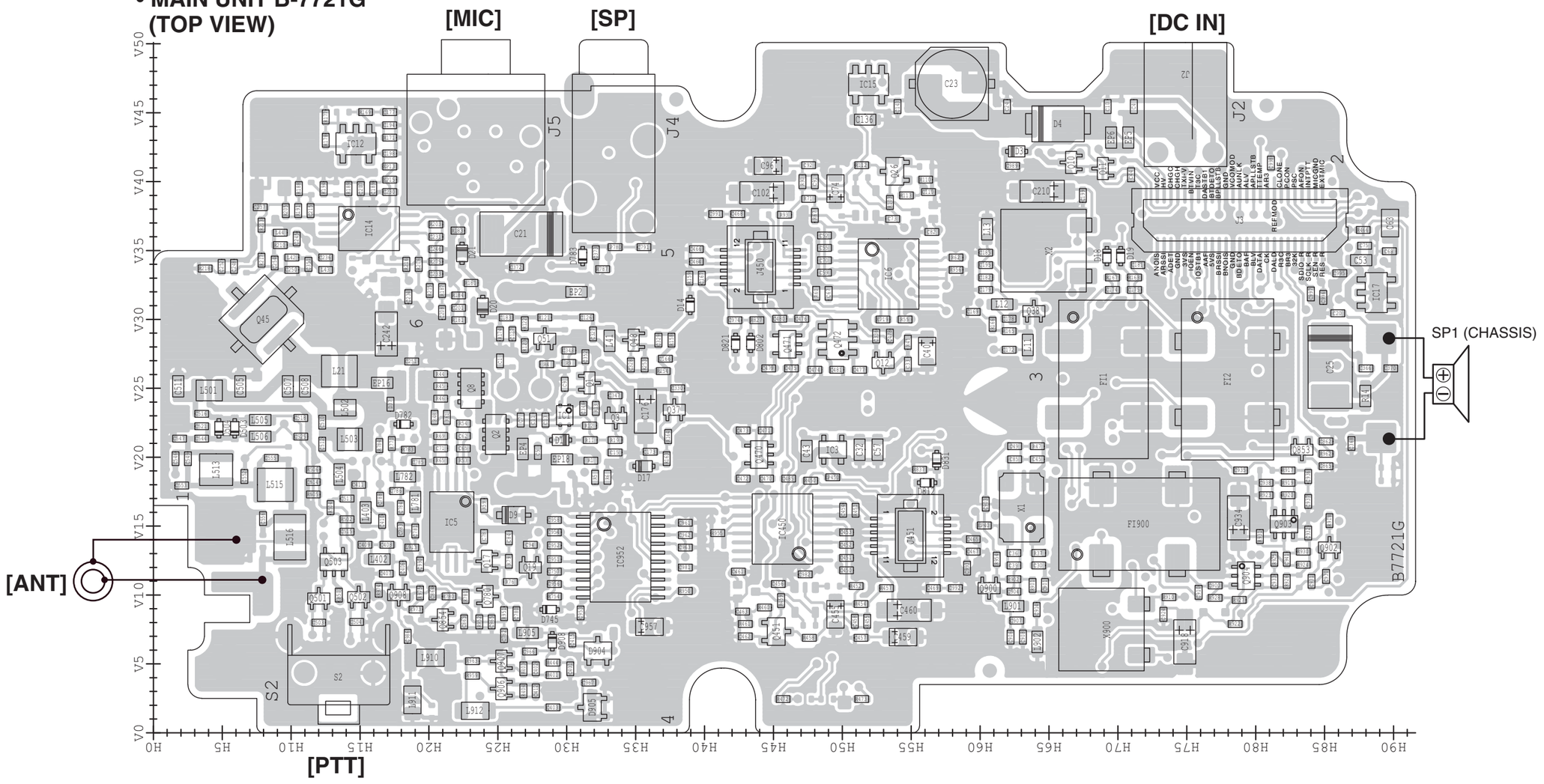

• VCO1 UNIT B-7723B (TOP VIEW)

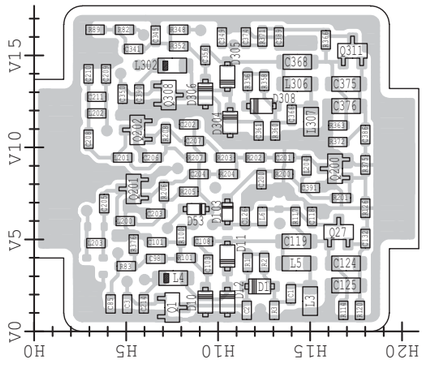

• VCO2 UNIT B-7723B (TOP VIEW)

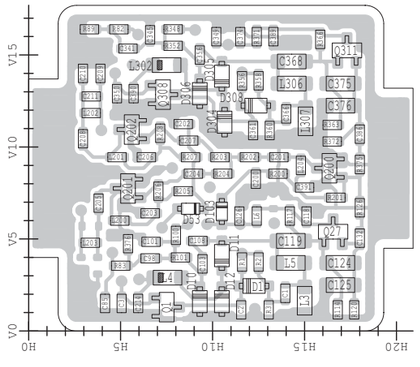

The combination of top side and bottom side of this page shows the actual configuration of P.C. board.

• MAIN UNIT B-7721G (BOTTOM VIEW)

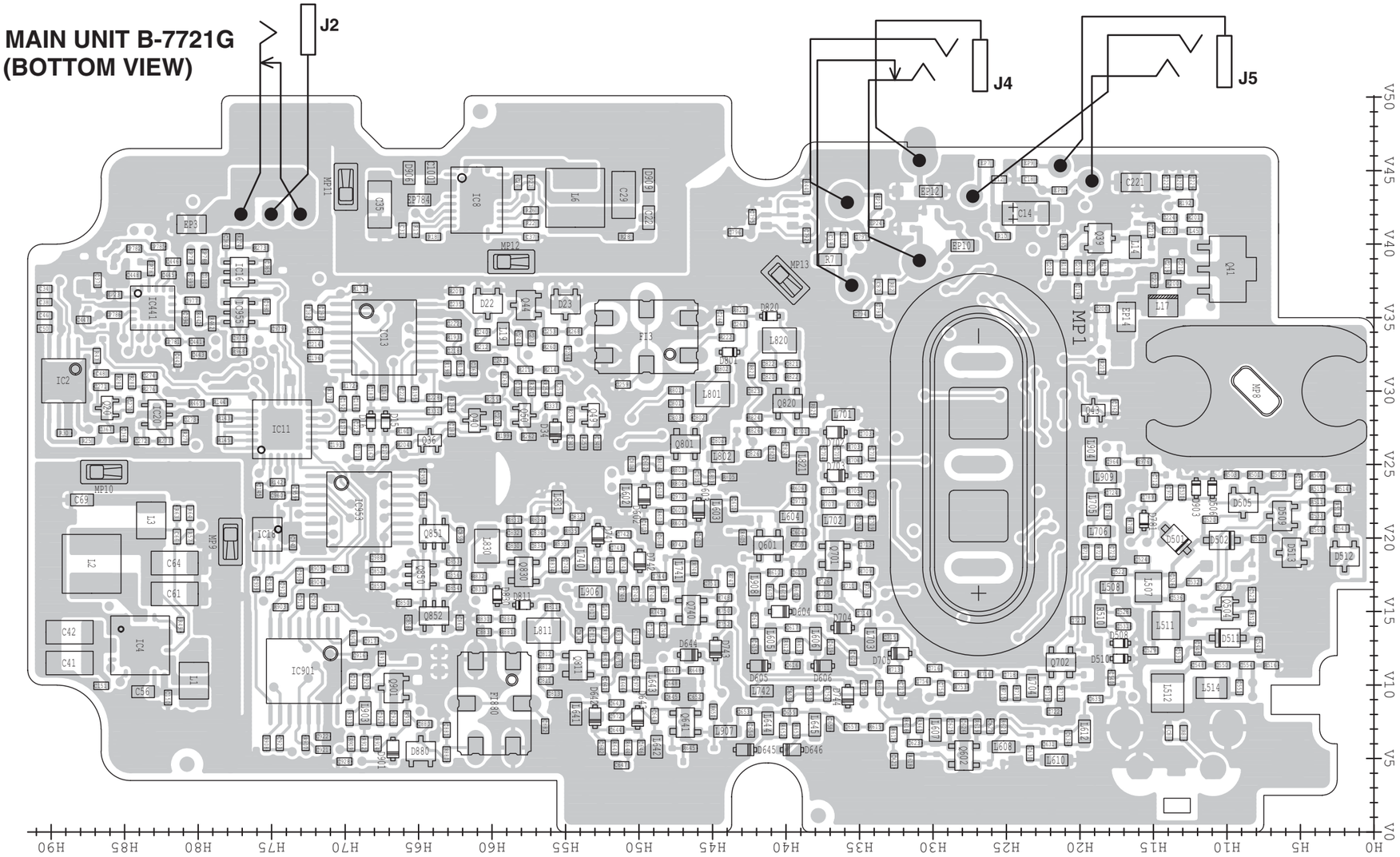

• VCO2 UNIT B-7723B (BOTTOM VIEW)

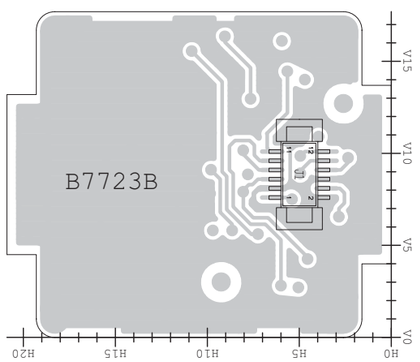

• VCO1 UNIT B-7723B (BOTTOM VIEW)

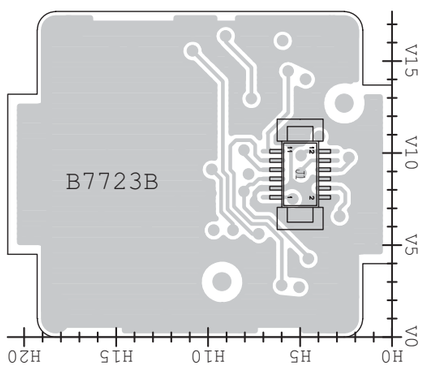

VOLTAGE DIAGRAM

• LOGIC UNIT (1/3)

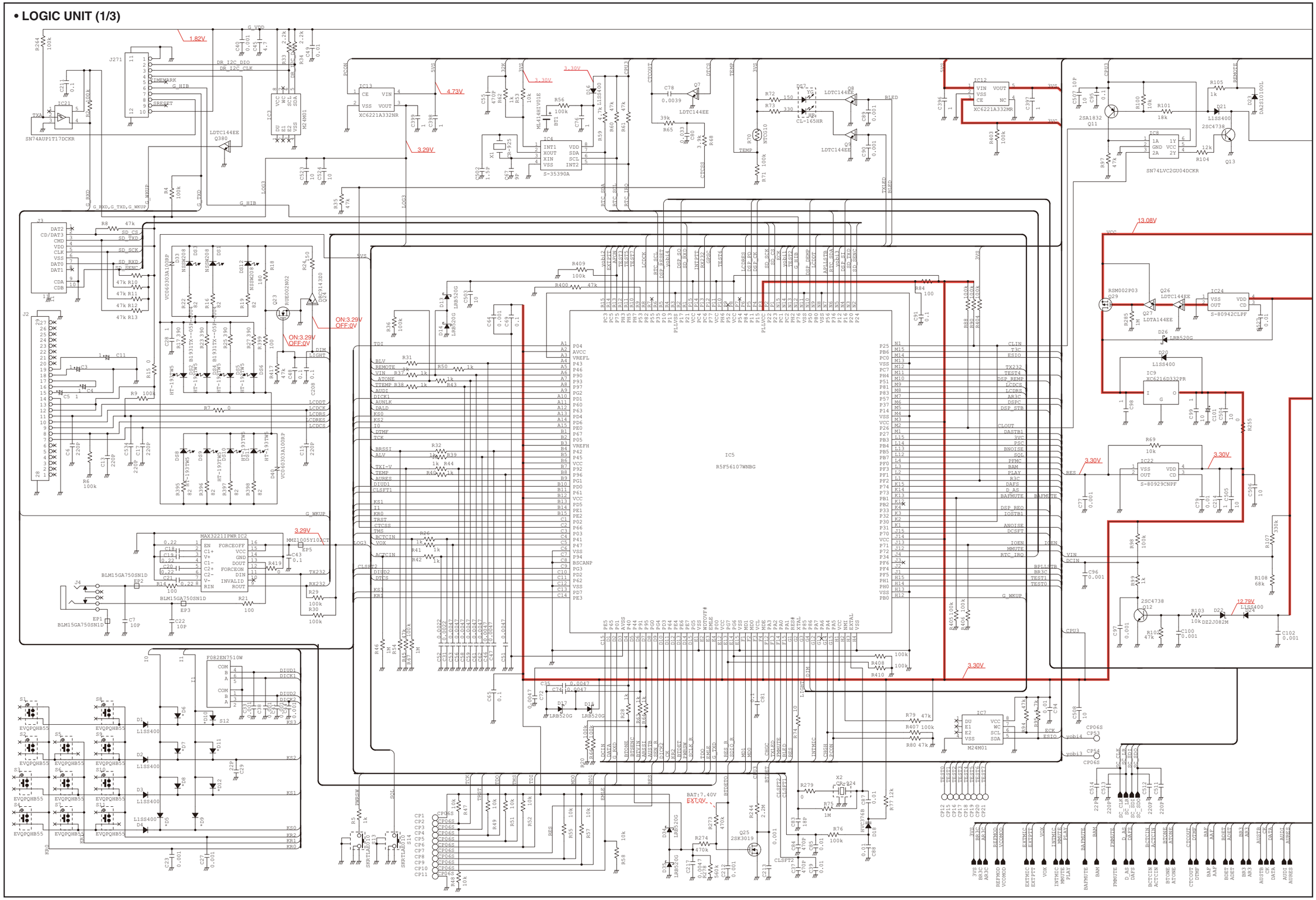

• LOGIC UNIT (2/3)

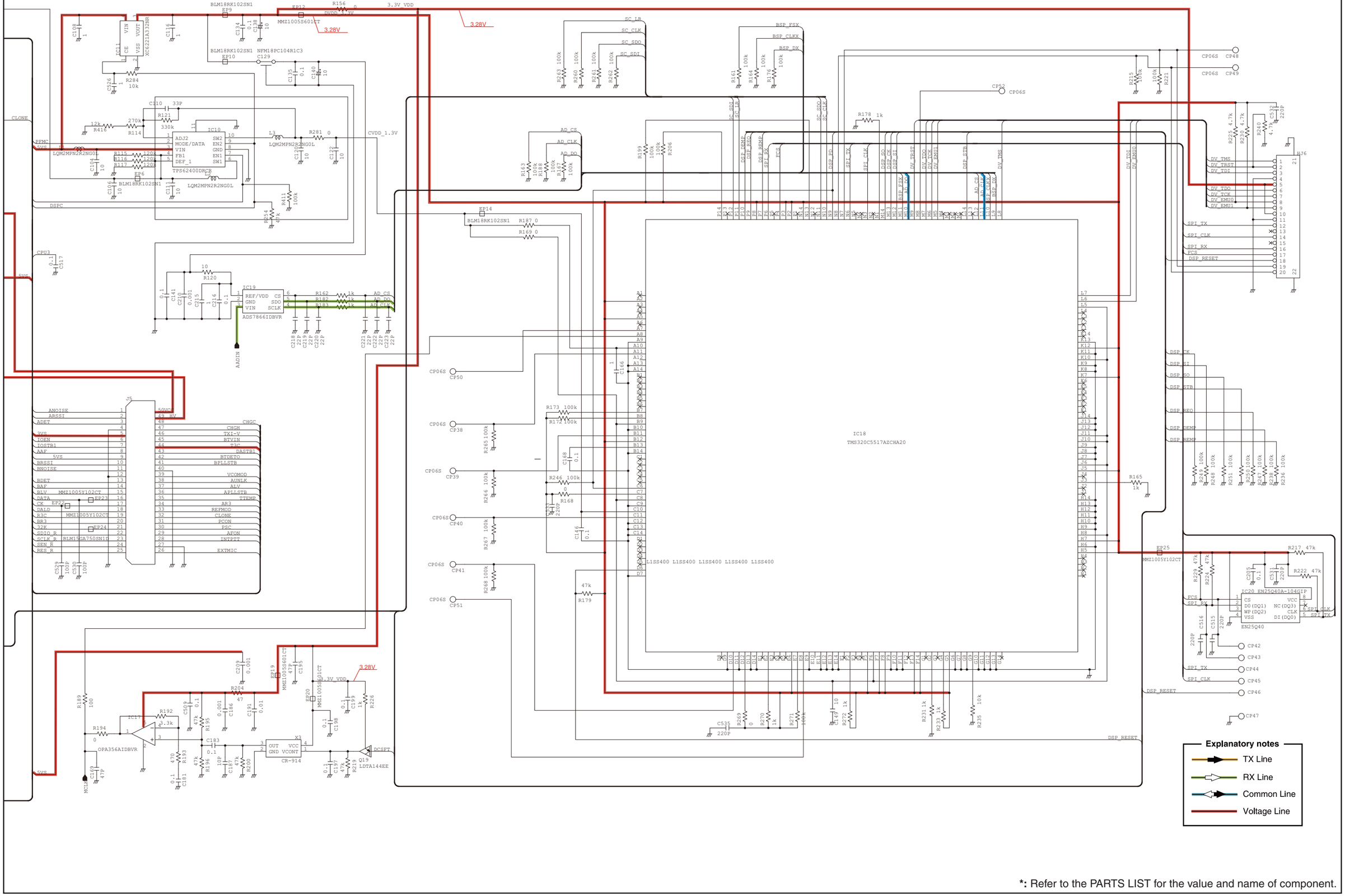

*: Refer to the PARTS LIST for the value and name of component.

• LOGIC UNIT (3/3)

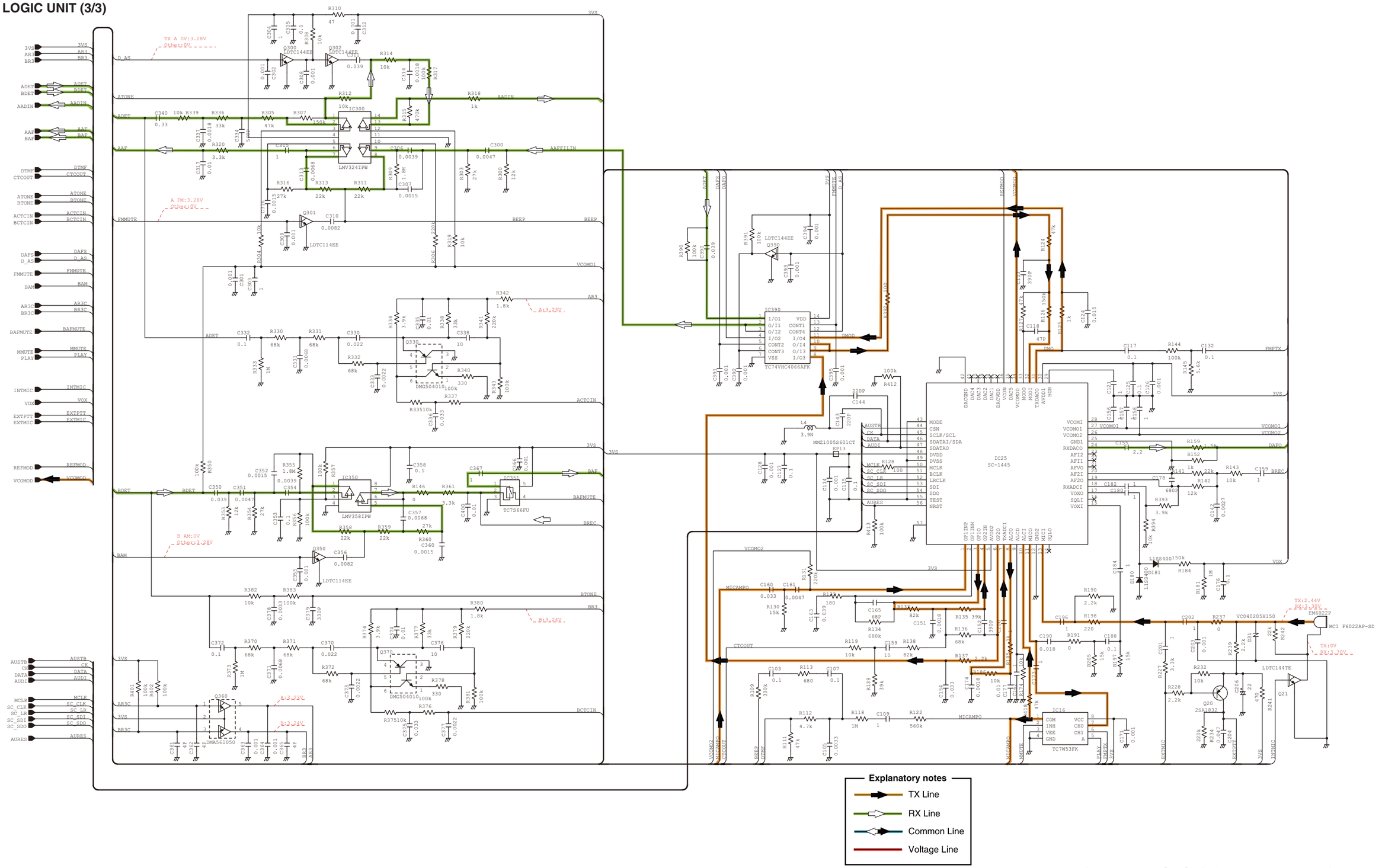

***:** Refer to the PARTS LIST for the value and name of component.

• MAIN UNIT (1/3)

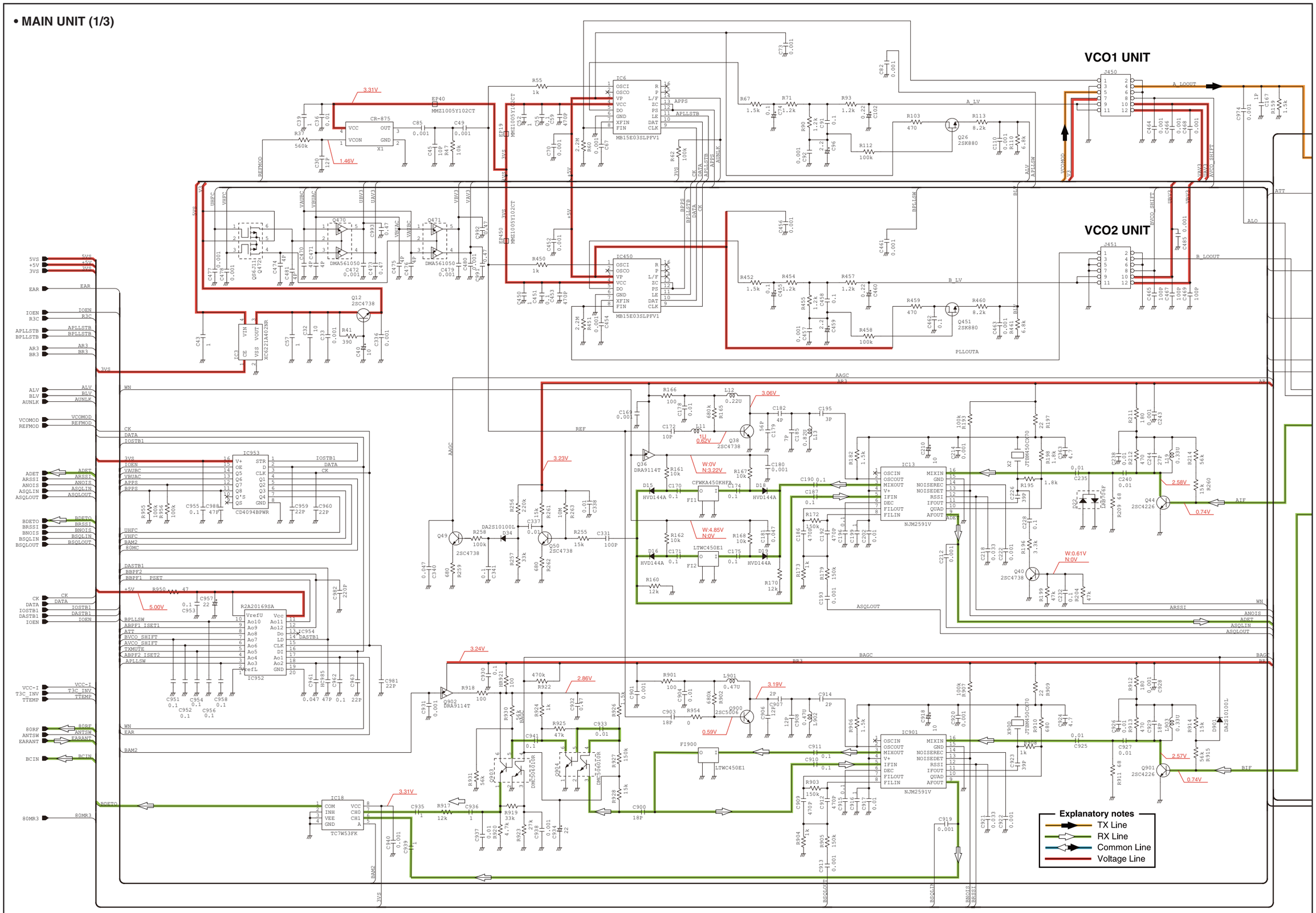

*: Refer to the PARTS LIST for the value and name of component.

• MAIN UNIT (2/3)

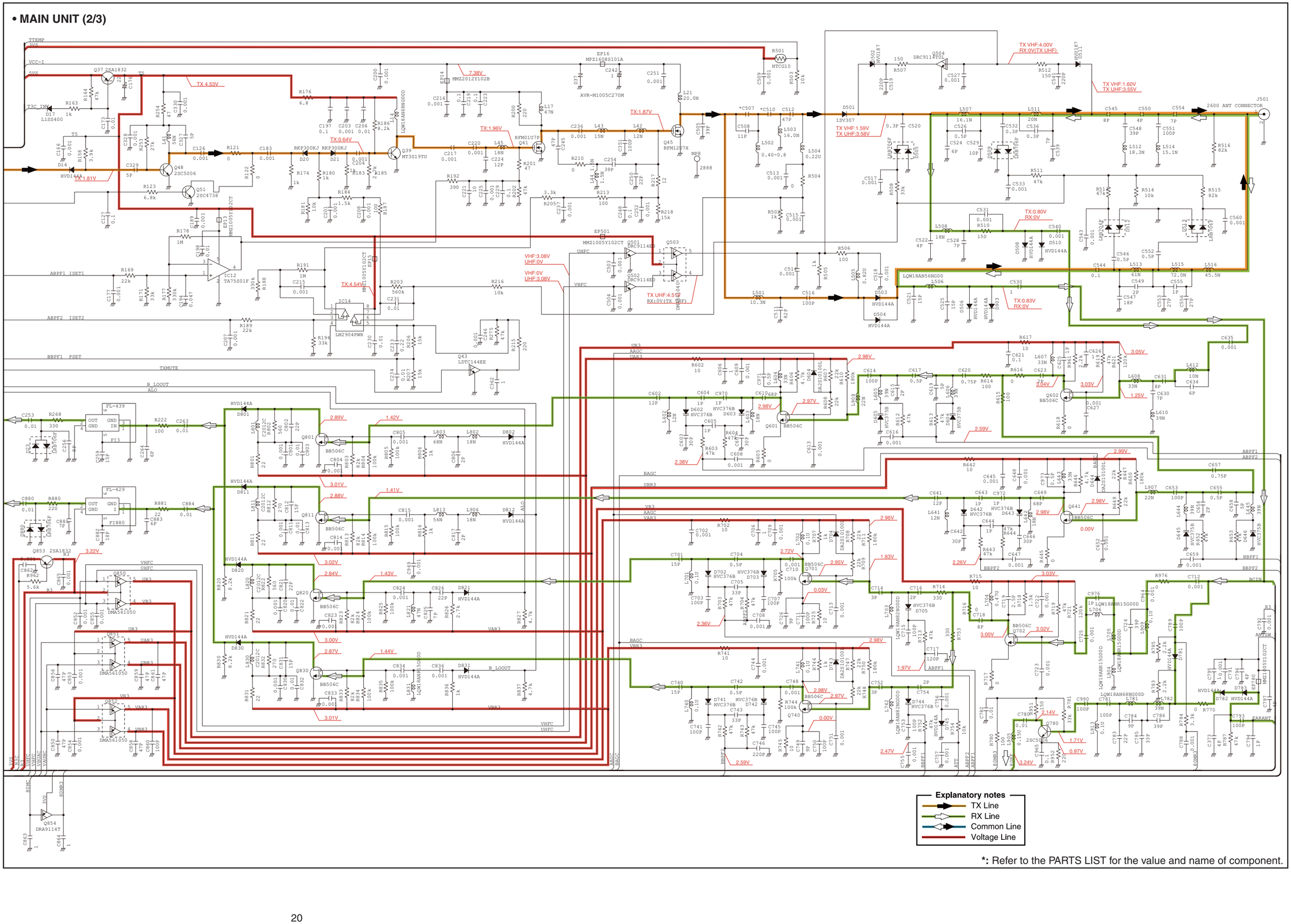

*: Refer to the PARTS LIST for the value and name of component.

• MAIN UNIT (3/3)

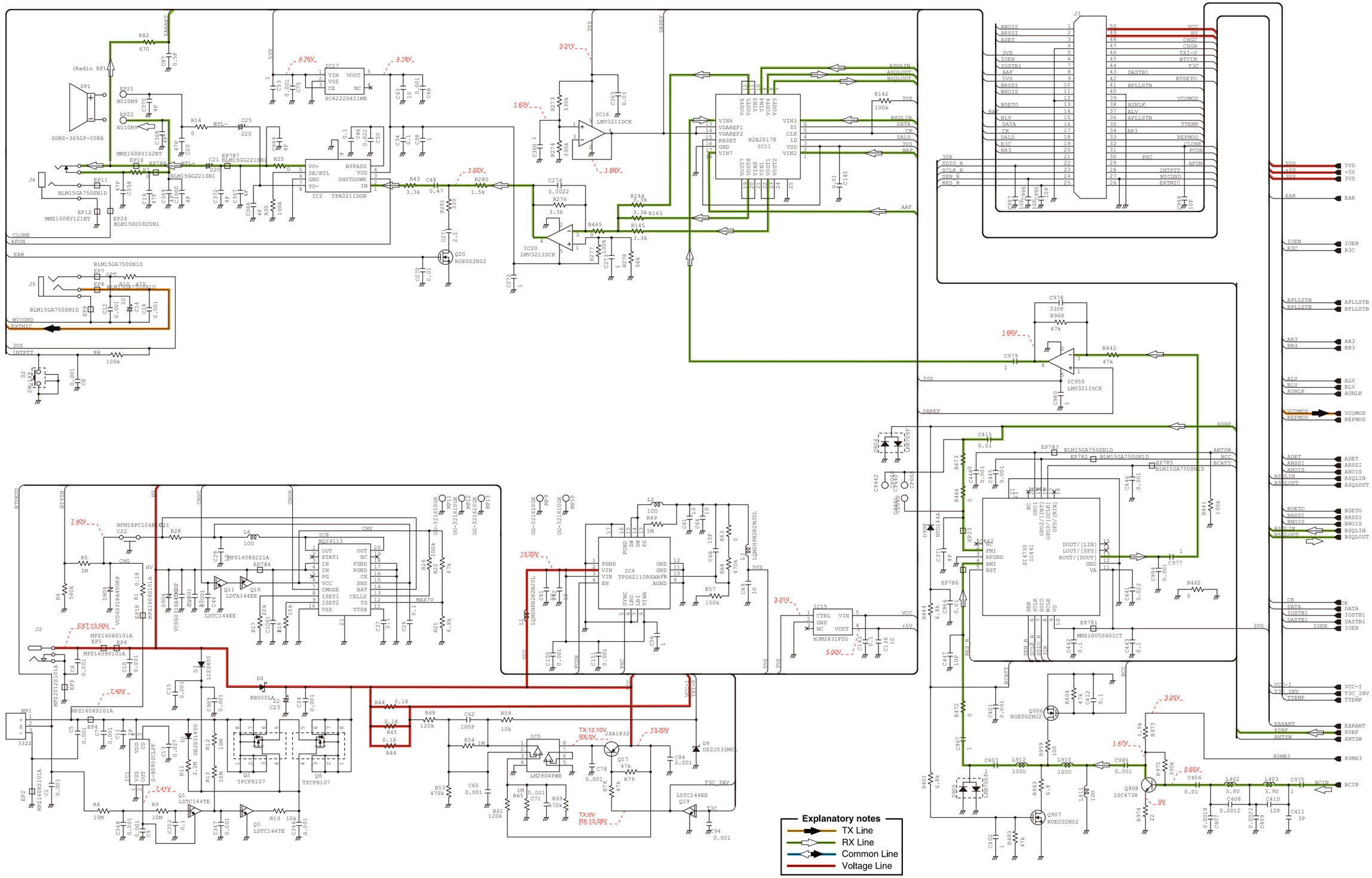

*: Refer to the PARTS LIST for the value and name of component.

• VCO1 UNIT

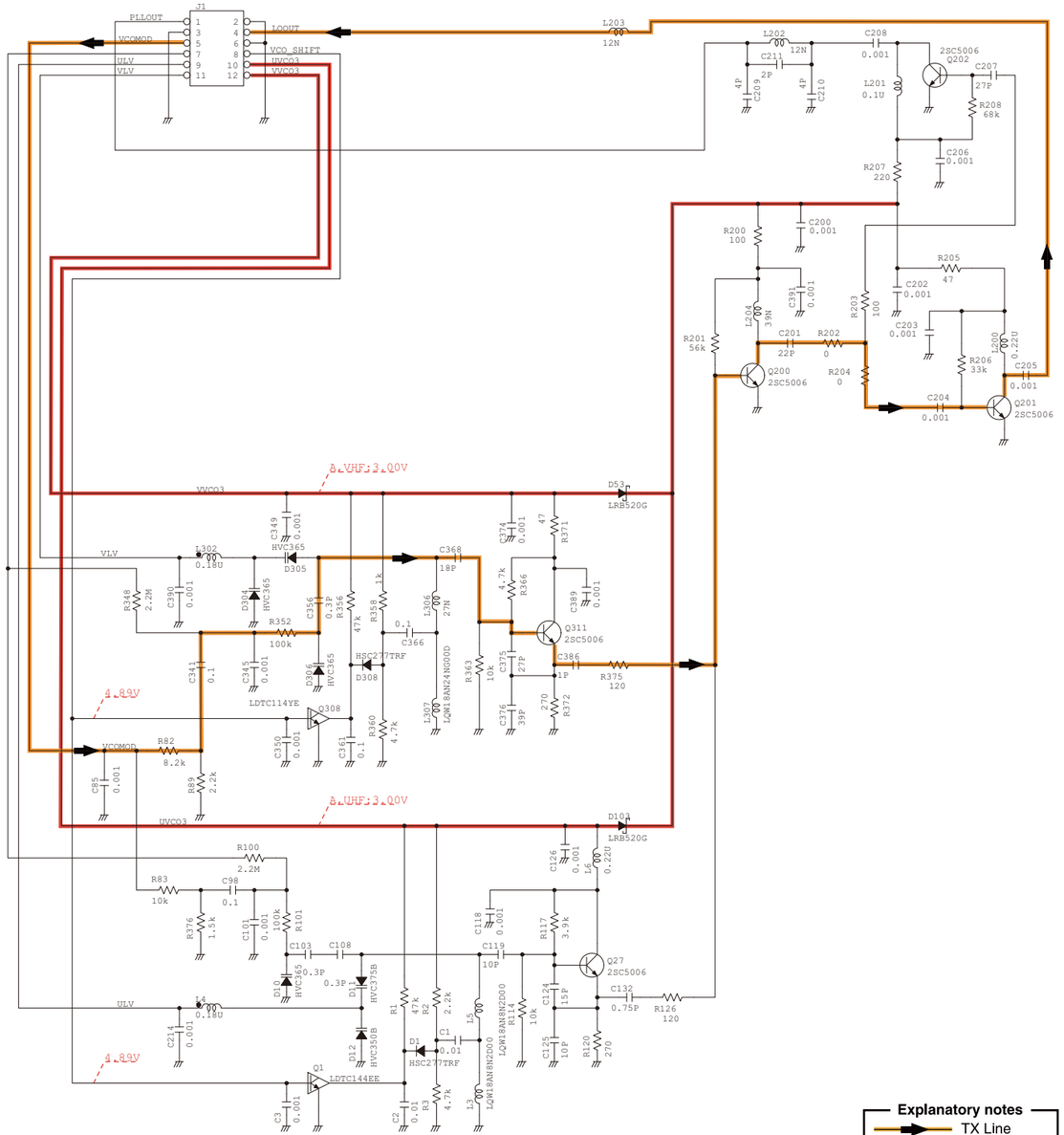

Explanatory notes
- TX Line
- RX Line
- Common Line
- Voltage Line

***:** Refer to the PARTS LIST for the value and name of component.

• VCO2 UNIT

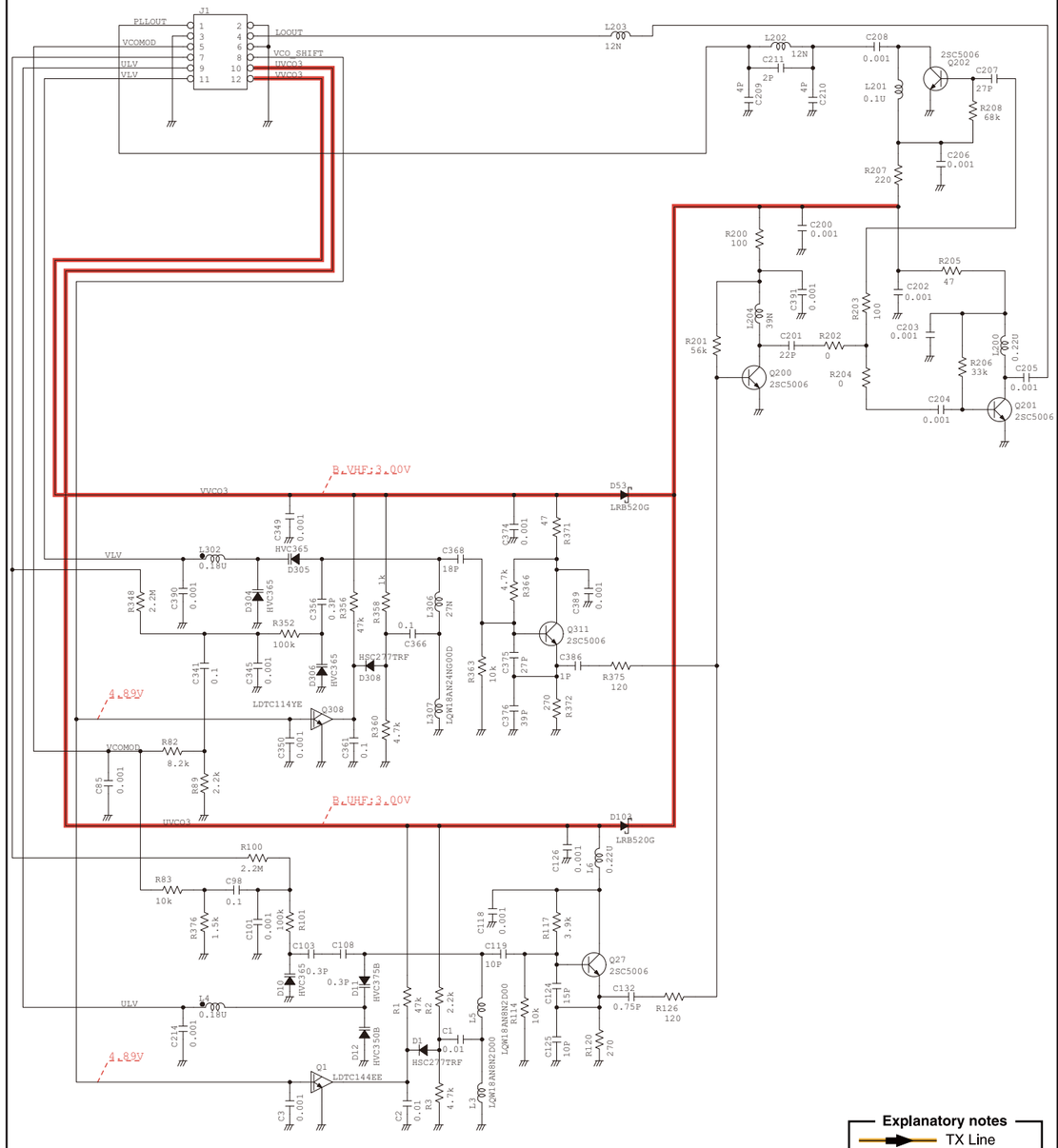

Explanatory notes
- TX Line
- RX Line
- Common Line
- Voltage Line

***:** Refer to the PARTS LIST for the value and name of component.

ICOM

SERVICE MANUAL

VHF/UHF TRANSCEIVER

ID–51A
ID–51E

S-14914XZ-C1
March 2013

Icom Inc.

INTRODUCTION

This service manual describes the latest technical information for the **ID-51A/ID-51E** VHF/UHF TRANSCEIVER, at the time of publication.

MODEL	VERSION	SUPPLIED CHARGER
ID-51E	EUR	BC-167SD
	UK	–
	ITR	BC-167SD
ID-51A	USA	BC-167SA
	KOR	BC-167SD
	EXP	BC-167SA
	EXP-01	BC-167SD
	AUS	BC-167SV

To upgrade quality, any electrical or mechanical parts and internal circuits are subject to change without notice or obligation.



(ID-51A)

CAUTION

NEVER connect the transceiver to an AC outlet or to a DC power supply that uses more than the specified voltage. This will ruin the transceiver.

DO NOT reverse the polarities of the power supply when connecting the transceiver.

DO NOT apply an RF signal of more than 20 dBm (100 mW) to the antenna connector. This could damage the transceiver's front-end.

ORDERING PARTS

Be sure to include the following four points when ordering replacement parts:

1. 10-digit Icom part number
2. Component name
3. Equipment model name and unit name
4. Quantity required

<ORDER EXAMPLE>

1110003491	S.IC	TA31136FNG	ID-51A MAIN UNIT	5 pieces
8820001210	Screw	2438 screw	ID-51E Top cover	10 pieces

Addresses are provided on the inside back cover for your convenience.

REPAIR NOTES

1. Make sure that the problem is internal before dis-assembling the transceiver.
2. **DO NOT** open the transceiver until the transceiver is disconnected from its power source.
3. **DO NOT** force any of the variable components. Turn them S-Lowly and smoothly.
4. **DO NOT** short any circuits or electronic parts. An insulated tuning tool MUST be used for all adjustments.
5. **DO NOT** keep power ON for a long time when the transceiver is defective.
6. **DO NOT** transmit power into a Standard Signal Generator or a Sweep Generator.
7. **ALWAYS** connect a 30 dB to 40 dB attenuator between the transceiver and a Deviation Meter or Spectrum Analyzer, when using such test equipment.
8. **READ** the instructions of the test equipment thoroughly before connecting it to the transceiver.

Icom, Icom Inc. and the Icom logo are registered trademarks of Icom Incorporated (Japan) in Japan, the United States, the United Kingdom, Germany, France, Spain, Russia and/or other countries.

TABLE OF CONTENTS

SECTION 1 SPECIFICATIONS

SECTION 2 INSIDE VIEWS

SECTION 3 DISASSEMBLY INSTRUCTION

SECTION 4 CIRCUIT DESCRIPITON

4-1 RECEIVER CIRCUITS 4-1
4-2 TRANSMITTER CIRCUITS 4-2
4-3 FREQUENCY SYNTHESIZER CIRCUITS 4-4
4-4 VOLTAGE BLOCK DIAGRAM 4-4
4-5 PORT ALLOCATIONS 4-5

SECTION 5 ADJUSTMENT PROCEDURES

5-1 PREPARATION 5-1
5-2 FREQUENCY ADJUSTMENT 5-3
5-3 TRANSMIT ADJUSTMENT 5-3
5-4 RECEIVE ADJUSTMENT 5-11

SECTION 6 PARTS LIST

SECTION 7 MECHANICAL PARTS

SECTION 8 BOARD LAYOUTS

SECTION 9 BLOCK DIAGRAM

SECTION 10 VOLTAGE DIAGRAM

SECTION 1 SPECIFICATIONS

◇ General

• Frequency coverage : (unit: MHz)

Version	TX	RX
EUR, KOR	144–146, 430–440	144–146, 430–440
UK	144–146, 430–440	108–174*1, 380–479*2
ITR	144–146, 430–434, 435–438	108–136.995,*1 144–146, 430–434, 435–438
U.S.A.	144–148, 430–450*3	108–174*4, 380–479*3
EXP	137–174*4, 400–479*2	108–174*4, 380–479*2
EXP-1	144–148, 430–440	108–174*4, 380–479*2
ALL	–	BC Radio (AM): 0.520–1.710 MHz BC Radio (FM): 76.0–108.0 MHz*5

*1Guaranteed 144–146 MHz only
*2Guaranteed 430–440 MHz only
*3Guaranteed 440–450 MHz only
*4Guaranteed 144–148 MHz only
*588.0–108.0 MHz for the USA version.

The SUB band audio signal may be muted, depending on the combination of operating band and mode.

• Mode : FM, AM (Rx only), DV
• Number of memory channels : 554 (incl. 50 scan edges and 4 call channels)
• Number of BC radio memory channels : 500
• Usable temp. range : –20°C to +60°C; –4°F to +140°F
• Tuning steps : 1, 5, 6.25, 8.33, 9, 10, 12.5, 15, 20, 25, 30, 50, 100, 125 and 200 kHz
*The selectable steps may differ, depending on the selected frequency band or operating mode.
• Frequency stability : ±2.5 ppm (–20°C to +60°C; –4°F to +140°F)
• Power supply : 10.0–16.0 V DC for external DC power, or specified Icom's battery pack
• Digital transmission speed : 4.8 kbps
• Voice coding speed : 2.4 kbps
• Current drain (at 7.4 V DC) :
TX (at 5 W) Less than 2.5 A
RX Max. output FM Less than 350 mA (Internal speaker)
Less than 200 mA (External speaker)
DV Less than 450 mA (Internal speaker)
Less than 300 mA (External speaker)
• Antenna connector : SMA (50 Ω)
• Dimensions (projections not included) : 58(W)×105.4(H)×26.4(D) mm; 2.3(W)×4.1(H)×1.0(D) in
• Weight (approximately) : 255 g; 9 oz (incl. battery pack and antenna)

◇ Transmitter

• Modulation system :
FM Variable reactance frequency modulation
DV GMSK reactance frequency modulation
• Output power (at 7.4 V DC) : High 5.0 W, Mid. 2.5 W, Low2 1.0 W, Low1 0.5 W, S-Low 0.1 W (Typical)
• Max. frequency deviation : ±5.0 kHz (FM wide: approx.)
±2.5 kHz (FM narrow: approx.)
• Spurious emissions : Less than –60 dBc at High/Mid. Less than –13 dBm at Low2/Low1/S-Low
• Ext. mic. impedance : 2.2 kΩ

◇ Receiver

• Receive system : Double-conversion superheterodyne
• Intermediate frequencies
A Band : 46.35 MHz (1st IF)
: 450 kHz (2nd IF)
B Band : 61.65 MHz (1st IF)
: 450 kHz (2nd IF)
• Sensitivity (except spurious points)
FM (1 kHz/3.5 kHz Deviation; 12 dB SINAD)
: Less than –15 dBμ
DV (PN9/GMSK 4.8 kbps; BER 1%)
: Less than –11 dBμ
• Audio output power (at 10% distortion)
Internal speaker : More than 0.4 W with a 16 Ω load
External speaker : More than 0.2 W with a 8 Ω load
• Selectivity
FM (Wide) : More than 55 dB
FM (Narrow), DV : More than 50 dB
• Ext. speaker connector : 3-conductor 3.5(d) mm; (1/8″)/8 Ω
• Spurious and image rejection ratio : More than 60 dB
• Squelch Sensitivity (threshold, 1 kHz/3.5 kHz Deviation) : Less than –15 dBμ

SECTION 2 INSIDE VIEWS

• LOGIC UNIT

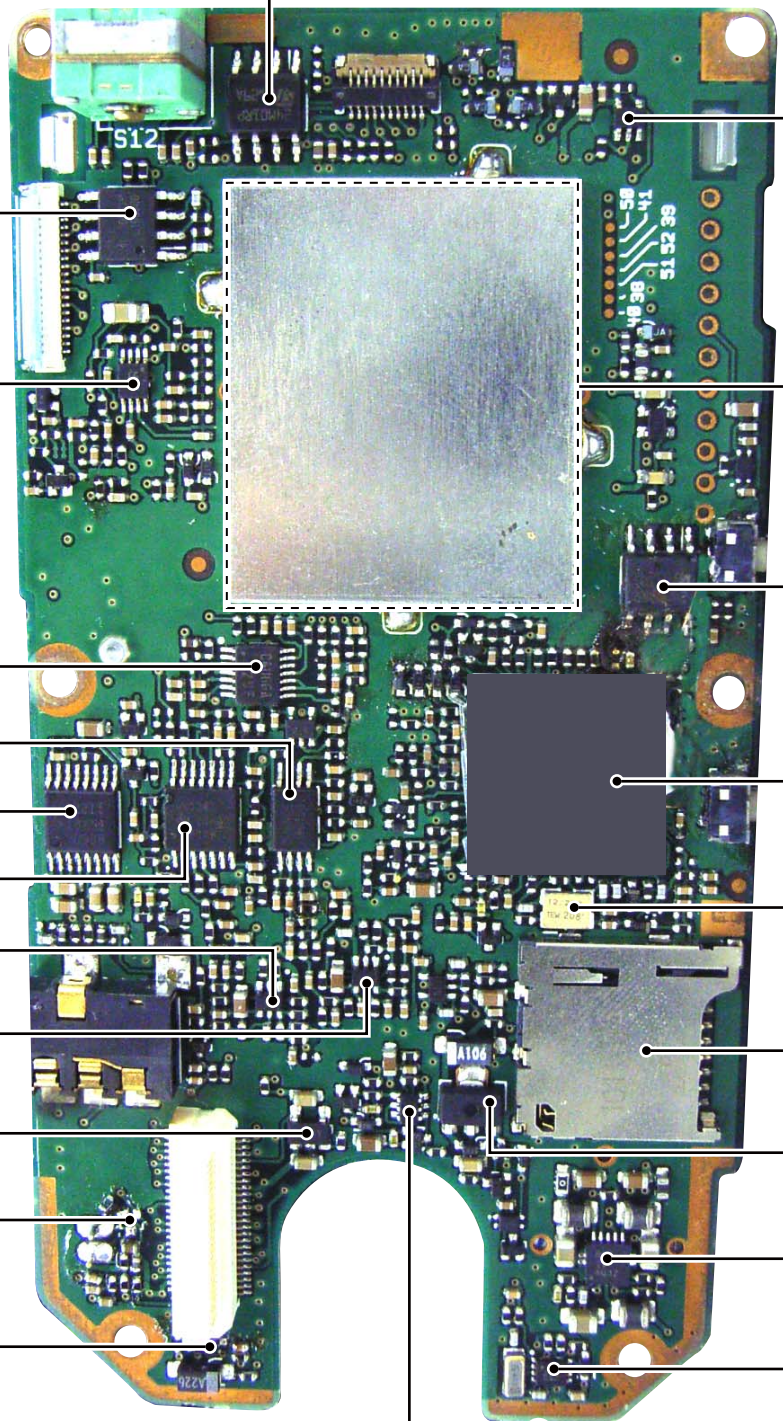

• MAIN UNIT
(TOP VIEW)

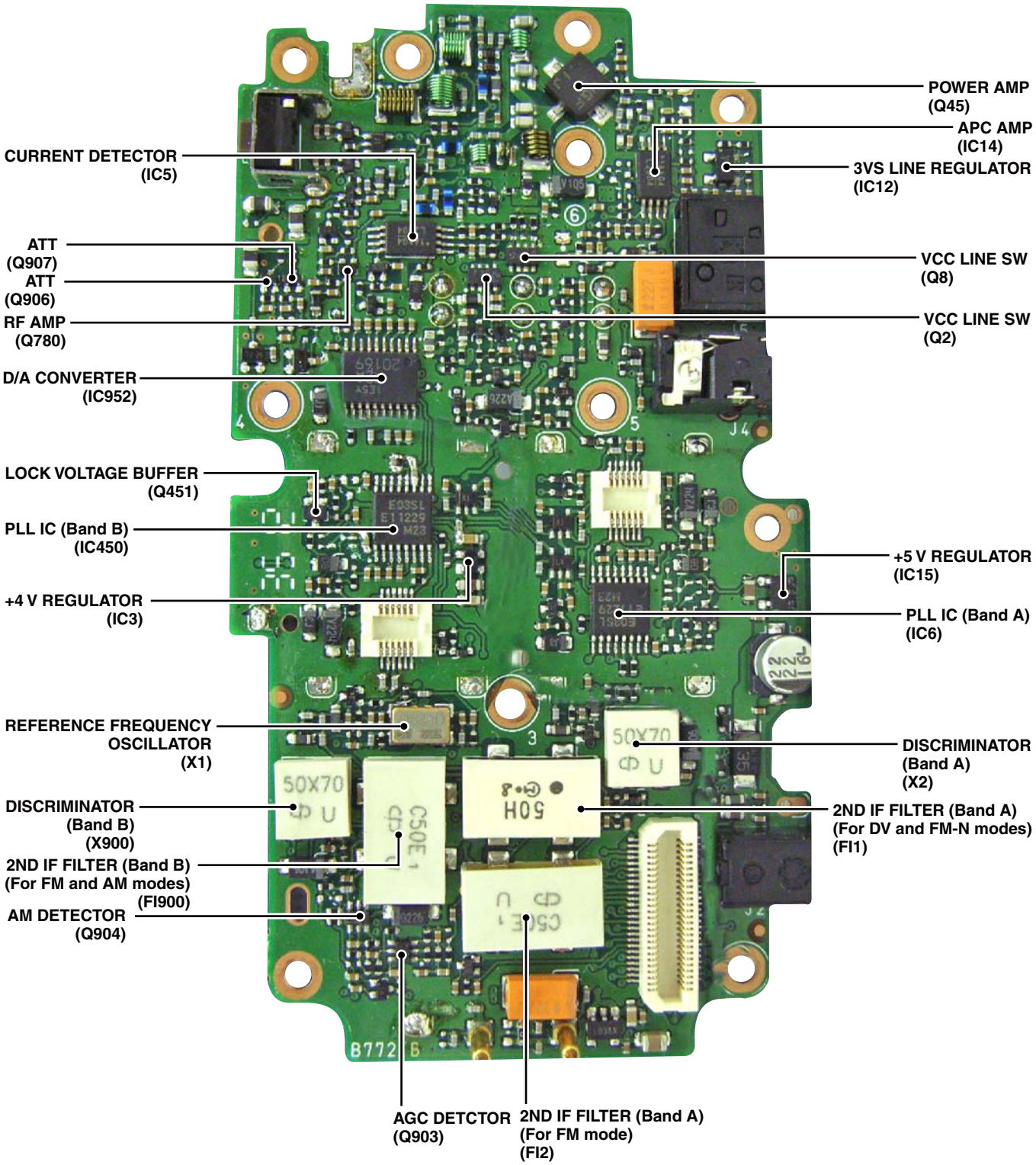

• MAIN UNIT
(BOTTOM VIEW)

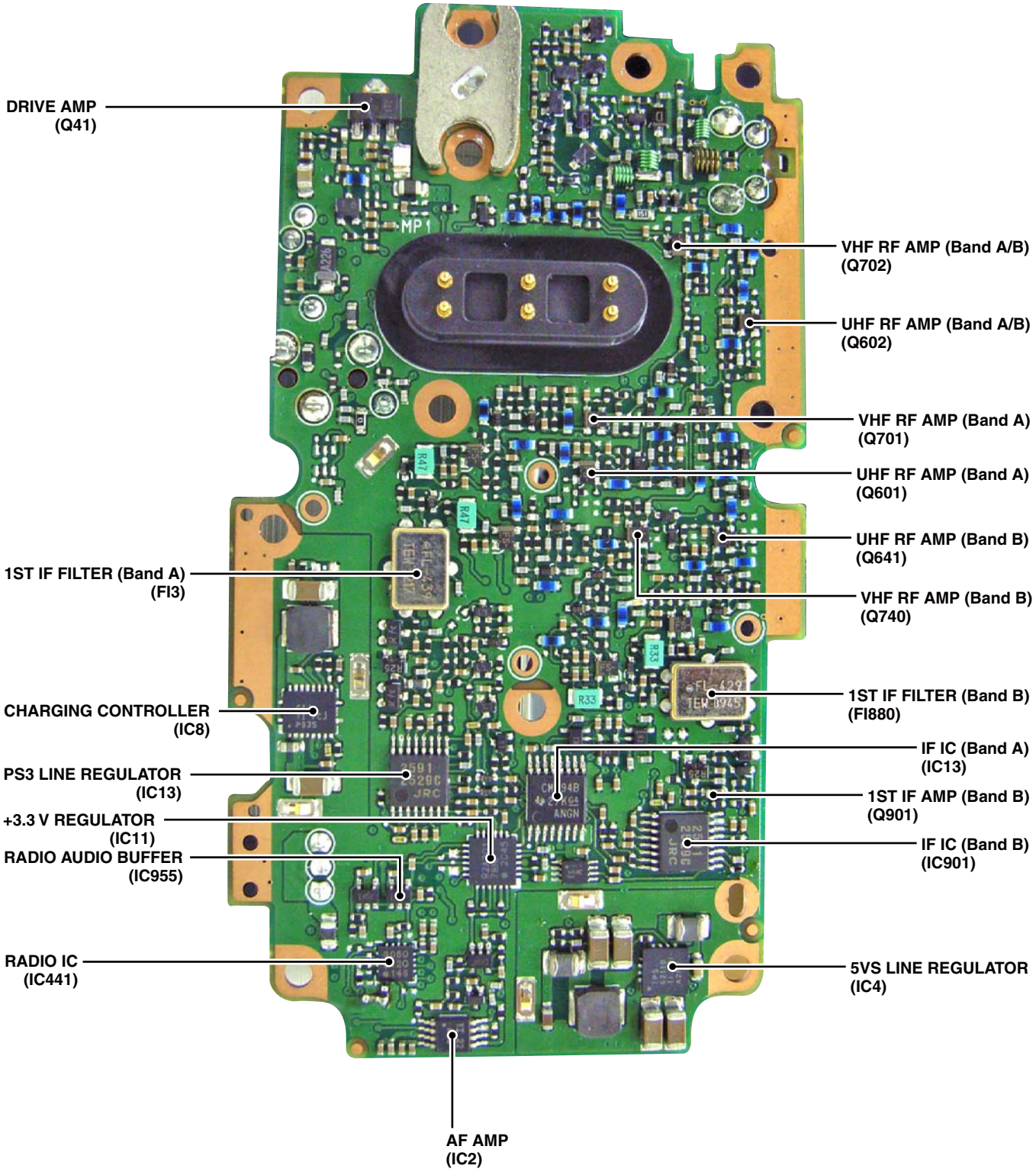

SECTION 3 DISASSEMBLY INSTRUCTION

Before disassembling:
REMOVE the microSD card if inserted. Otherwise the front panel and chassis cannot be separated.
See ID-51A/E ADVANCED INSTRUCTIONS for removal details.

1. REMOVING THE LOGIC UNIT

1) Remove 2 dials and antenna nut from the front panel.

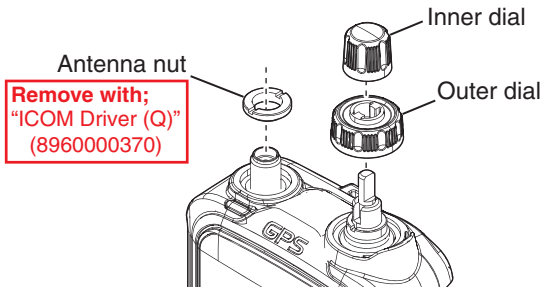

2) Remove 2 screws from the bottom of chassis.

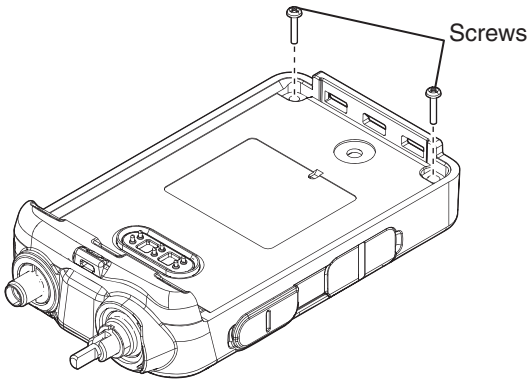

3) Take out the LOGIC UNIT with chassis from the front panel.

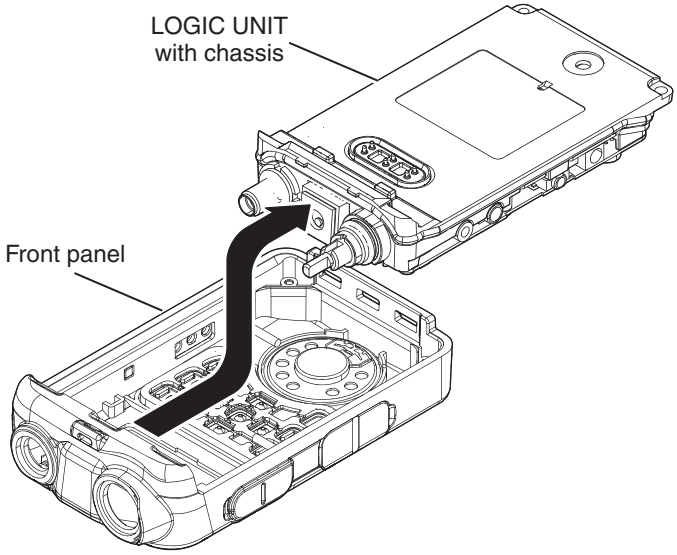

For easy separation of the CHASSIS
Use a suction lifter to lift the bottom of the CHASSIS up.

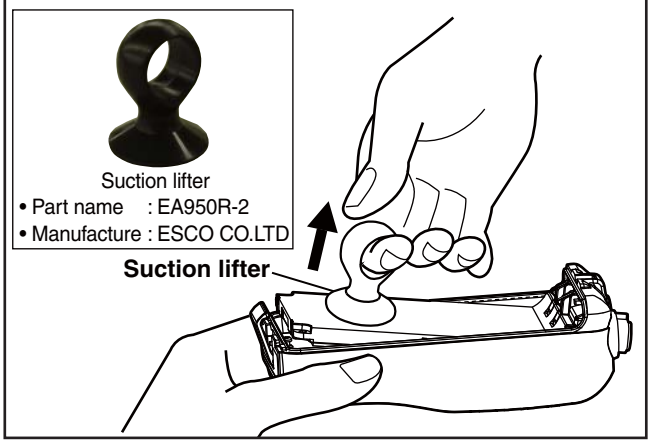

4) Remove 6 screws from the LOGIC UNIT.
5) Unsolder 6 points at the rotary encoder.

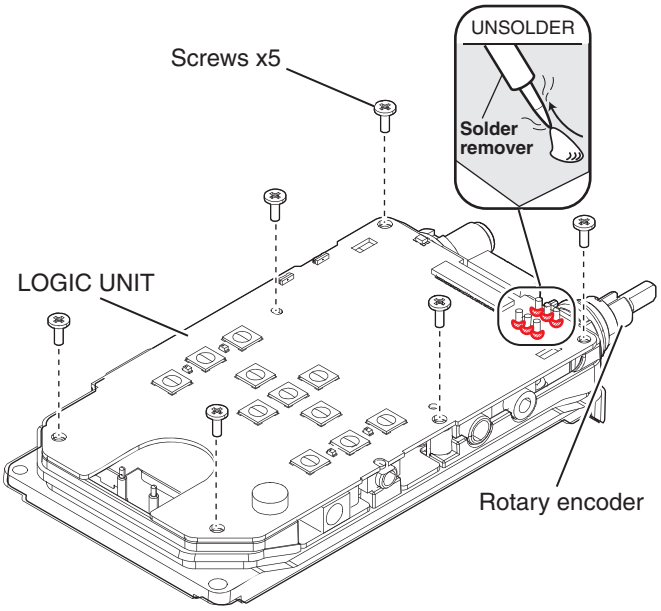

6) Separate the LOGIC UNIT from the chassis, and then disconnect the flat cable from the LOGIC UNIT.

BE CAREFUL about the **flat cable** and **connector** when separating the LOGIC UNIT from the chassis.

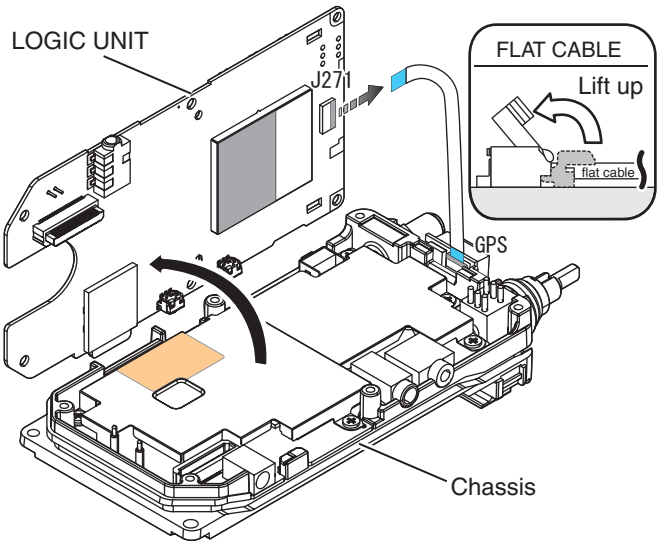

(Continued on page 3-2)

2. REMOVING THE MAIN UNIT

1) Unsolder 2 points on the shield plate.

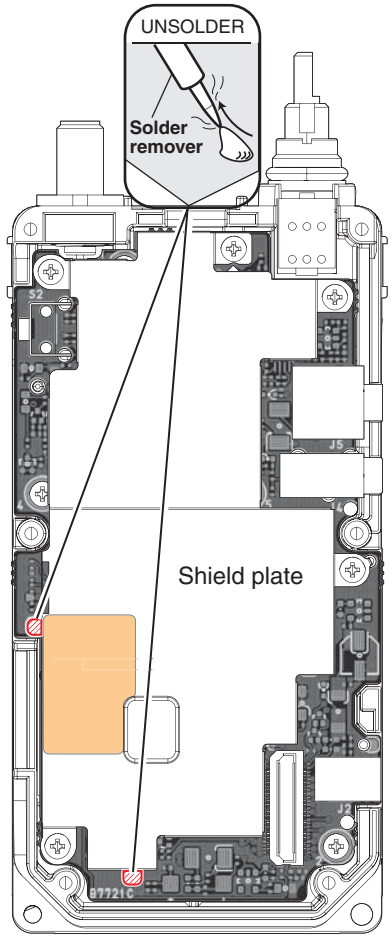

2) Remove 5 screws from the shield plate, and then remove it.

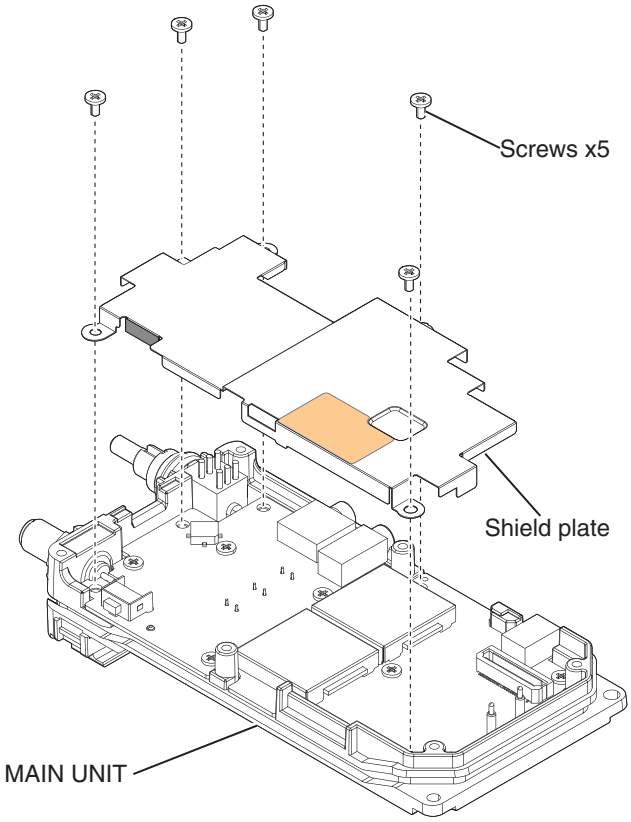

3) Unsolder a point at the antenna connector.

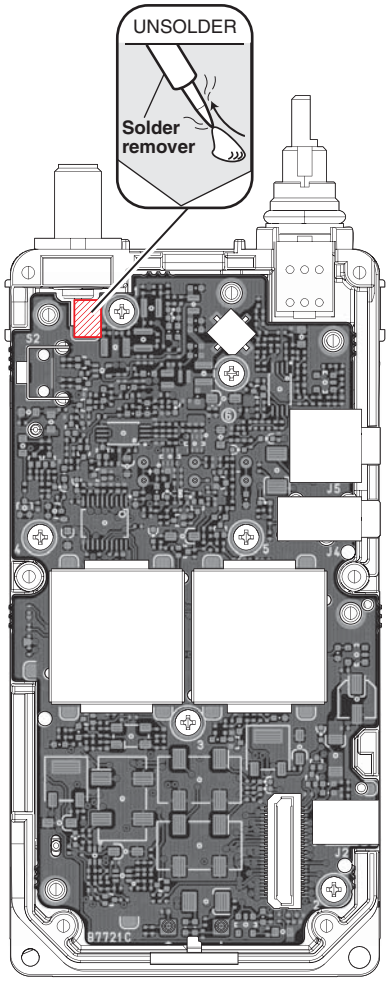

4) Remove 6 screws from the MAIN UNIT, and then remove the MAIN UNIT from the chassis.

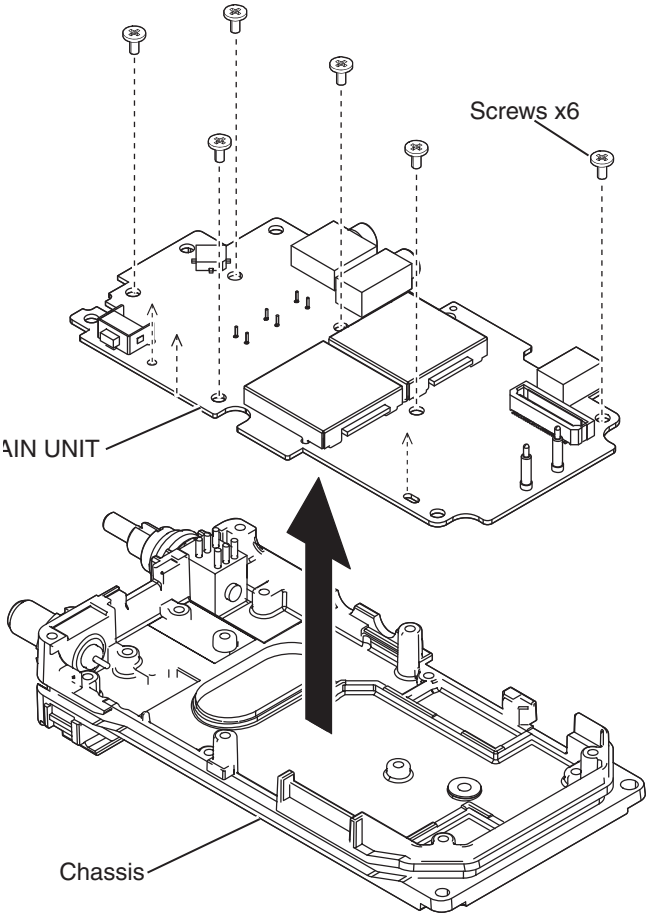

SECTION 4 CIRCUIT DESCRIPTION

4-1 RECEIVE CIRCUITS

RF CIRCUITS

VHF BAND (108–174 MHz)

The RF signal from the antenna is passed through two LPFs (L513, L515, L516, C547, C549, C553, C555 and C556), ANT SW (D506, D903) and BPF (L705, L706, L909, C724 and C976), and then applied to the RF AMP (Q702).

• Band A (137–174 MHz)

The amplified signal is passed through the BPF (D705, L703 and C715) and AGC circuit (Q49, Q50, D34, D704), and then applied to the RF AMP (Q701).
The amplified signal is applied to the 1st IF circuit, through the BPF (D702, D703, L701, C703 to C705).

• Band B (108–174 MHz)

The amplified signal is passed through the ATT (D745), BPF (D744, L742 and C753) and AGC circuit (Q903, D743), and then applied to the RF AMP (Q740).
The amplified signal is applied to the 1st IF circuit, through the BPF (D741, D742, L740, C741 to C743).

UHF BAND (380–479 MHz)

The RF signal from the antenna is passed through the HPF (L512, L514, C545, C548, C550, C551 and C554), two LPFs (L511, C536, C539 and L507, C524, C526, C529), ANT SW (D508 and D510) and BPF (L608, L610, L612, C630, C631 and C634), and then applied to the RF AMP (Q602).

• Band A

The amplified signal is passed through the two BPFs (D605, L605, C615 and D606, L606, C619) and AGC circuit (Q49, Q50, D34, D604), and then applied to the RF AMP (Q601).

The amplified signal is applied to the 1st IF circuit, through the BPF (D602, D603, L602, L603, C603 to C605, C607, C907).

• Band B

The amplified signal is passed through the BPF (D645, D646, L644, L645, C654, C655, C658) and AGC circuit (Q903, D644), and then applied to the RF AMP (Q641).

The amplified signal is applied to the 1st IF circuit, through the BPF (D642, D643. L641, L642, C642 to C644, C646 and C972).

• RF CIRCUITS

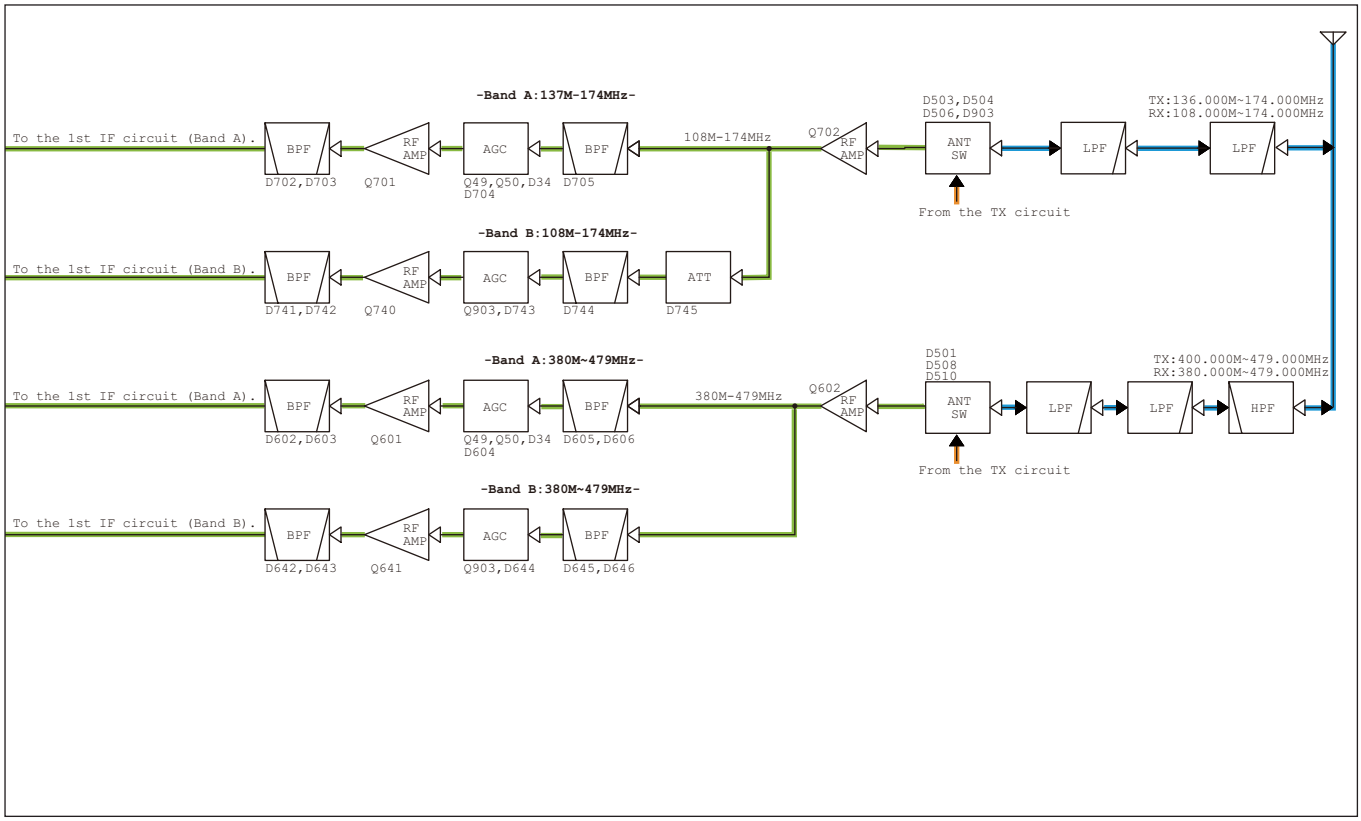

1ST IF CIRCUITS

VHF BAND (108–174 MHz)

• Band A (137–174 MHz)

The RX signal from the RF circuit is applied to the 1st mixer (Q820) and mixed with the 1st LO signal, resulting in the 46.35 MHz 1st IF signal. The converted signal is passed through the RF SW (D820), 1st IF filter (FI3) and limiter (D23), and then applied to the 1st IF AMP. (Q44). The amplified signal is applied to the 2nd IF circuit, through the limiter (D22).

• Band B (108–174 MHz)

The RX signal from the RF circuit is applied to the 1st mixer (Q830) and mixed with the 1st LO signal, resulting in the 61.65 MHz 1st IF signal. The converted signal is passed through the RF SW (D830), 1st IF filter (FI880) and limiter (D880), and then applied to the 1st IF AMP. (Q901). The amplified signal is applied to the 2nd IF circuit.

UHF BAND (380–479 MHz)

• Band A

The RX signal from the RF circuit is applied to the 1st mixer (Q801) and mixed with the 1st LO signal, resulting in the 46.35 MHz 1st IF signal. The converted signal is passed through the RF SW (D801), 1st IF filter (FI3) and limiter (D23), and then applied to the 1st IF AMP. (Q44). The amplified signal is applied to the 2nd IF circuit, through the limiter (D22).

• Band B

The RX signal from the RF circuit is applied to the 1st mixer (Q811) and mixed with the 1st LO signal, resulting in the 61.65 MHz 1st IF signal. The converted signal is passed through the RF SW (D811), 1st IF filter (FI880) and limiter (D880), and then applied to the 1st IF AMP. (Q901). The amplified signal is applied to the 2nd IF circuit.

• 1ST IF CIRCUITS

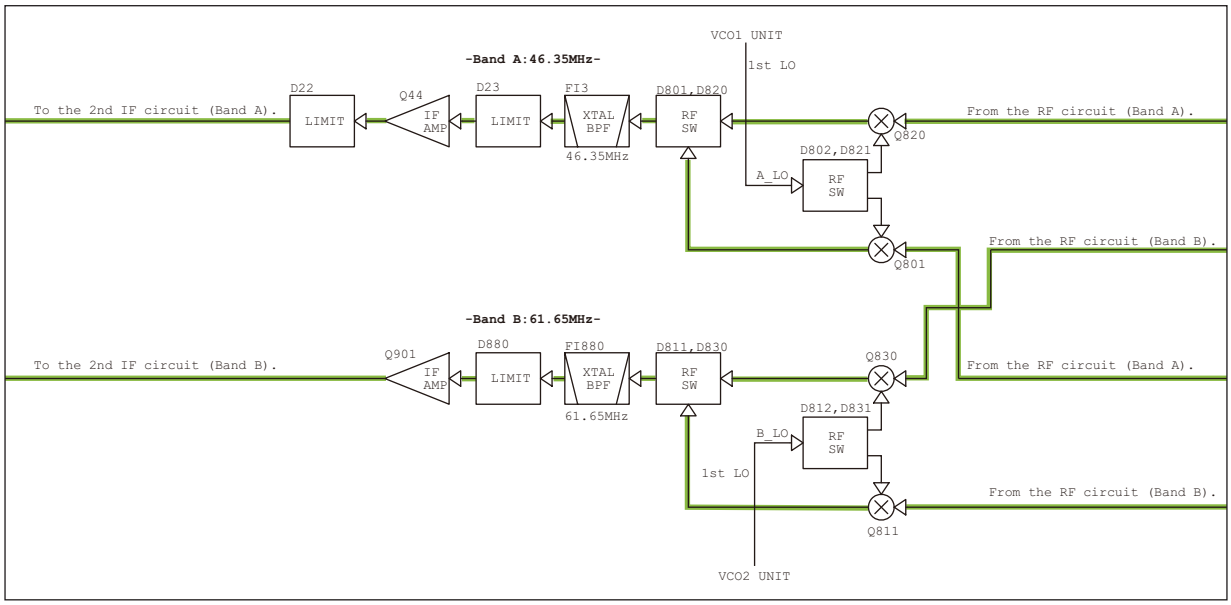

2ND IF CIRCUITS

• Band A

The 1st IF signal from the 1st IF circuit is applied to the IF IC (IC13, pin 16), which contains the 2nd IF AMP, 2nd mixer, FM demodulator, and so on.

The 1st IF signal is mixed with the 45.9 MHz 2nd LO signal, resulting in the 450 kHz 2nd IF signal. The converted signal is passed through the external 2nd IF filter (FM mode; FI2, FM-N or DV mode; FI1) to remove sideband noise. The filtered signal is amplified by the 2nd IF AMP, and then demodulated by the quadrature detector (X2).
The demodulated signal is applied to the RX AF circuit (For FM and FM-N modes) or digital demodulation circuit (For DV mode).

• Band B

The 1st IF signal from the 1st IF circuit is applied to the IF IC (IC901, pin 16), which contains the 2nd IF AMP, 2nd mixer, FM demodulator, and so on.

The 1st IF signal is mixed with the 61.2 MHz 2nd LO signal, resulting in the 450 kHz 2nd IF signal. The converted signal is passed through the external 2nd IF filter (FI900) to remove sideband noise.

While receiving in the FM mode, the filtered signal is amplified by the 2nd IF AMP, and then demodulated by the quadrature detector (X900). The demodulated signal is applied to the RX AF circuit, through the AF SW (IC18, pins 6, 1).

While receiving in the AM mode, the filtered signal is demodulated by Q904 and amplified by the AGC AMP (Q903). The demodulated signal is applied to the RX AF circuit, through the AF SW (IC18, pins 7, 1).

• 2ND IF CIRCUITS

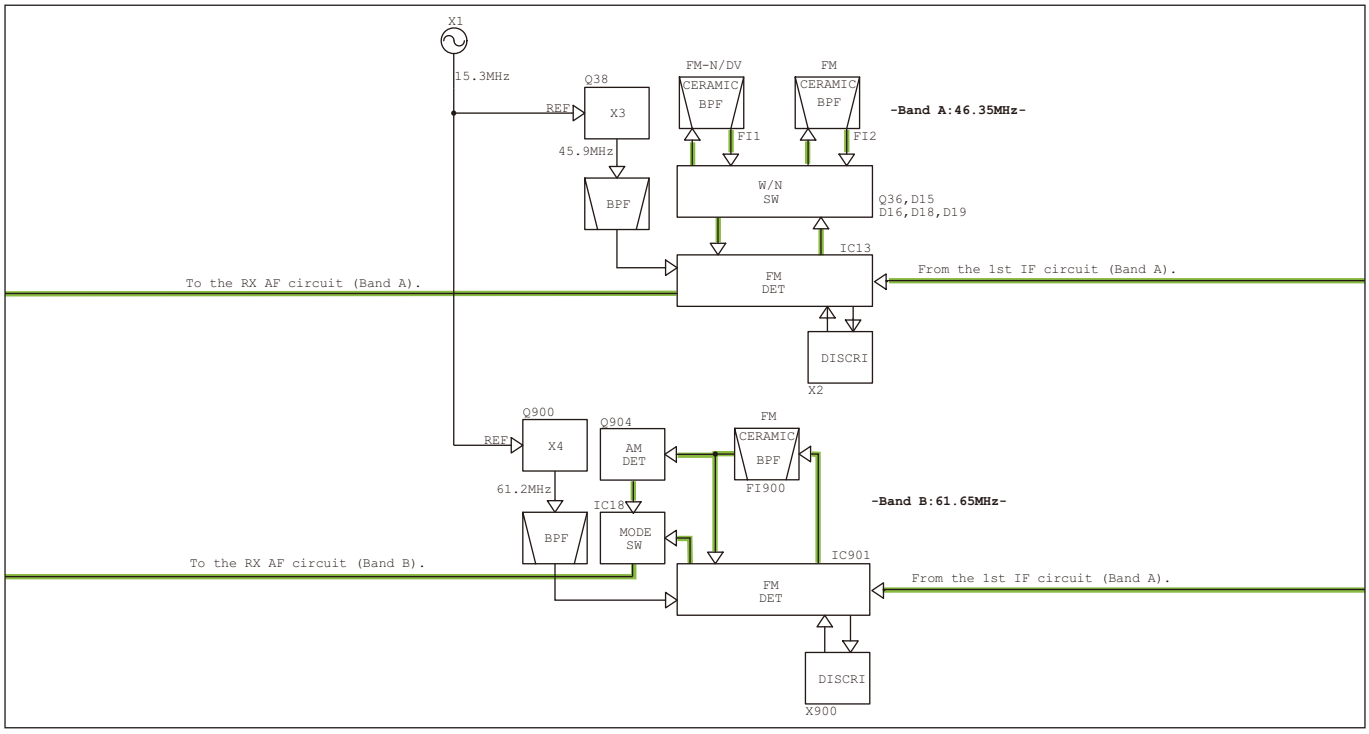

DIGITAL DEMODULATION CIRCUIT (LOGIC UNIT)

While operating in the DV mode, the demodulated signal (digital audio signal) is passed through the LPF (R305, R336, R339, C334 and C337) and amplified by the AF AMP (IC300, pins 2 and 1). The amplified signal is passed through the LPF (Q300 and Q302) and amplified by another AF AMP (IC300, pins 13 and 14), and then applied to the A/D converter (IC19, pin 3) to be converted into the digital audio signal.

The digital audio signal is demodulated by the DSP (IC18, pins M10 and L11), and then applied to the linear codec (IC25) to be decoded into an analog audio signal.

The decoded AF signal is applied to the RX AF circuit.

RX AF CIRCUIT (LOGIC AND MAIN UNITS)

• Band A

The demodulated AF signal is passed through the mode SW (IC390, pins 4 and 3) and AF filter (IC300, pins 9 and 8, 5 and 7), and then applied to the D/A converter (MAIN UNIT: IC11, pin 18) to be adjusted in volume level.

• Band B

The demodulated AF signal is passed through the AF filter (IC350, pins 2 and 1, 5 and 7) and mute SW (IC351, pins 2 and 1), and then applied to the D/A converter (MAIN UNIT: IC11, pin 1) to be adjusted in volume level.

The level-adjusted AF signal is amplified by the buffer (MAIN UNIT: IC20, pins 3 and 4), and then applied to the AF power AMP (MAIN UNIT: IC2, pin 1), through the ATT (MAIN UNIT: Q20).

The amplified AF signal is output to the internal speaker (CHASSIS: SP1) or external speaker, through the [SP] jack (MAIN UNIT: J4).

RADIO RECEIVE CIRCUITS

• FM BAND (76–108 MHz)

The RF signal from the antenna or earphone is passed through two LPFs (L513, L515, L516, C547, C549, C553, C555 and C556), ANT SW (D506 and D903), RF SW (D781), ANT SW (D782 and D783) and LPF (L781, L782, C783 to C786), and then applied to the RF AMP (Q780).

The amplified signal is applied to the radio IC (IC441, pin 2), through the ATT (D908) and limiter (D904).

• AM BAND (0.52–1.71 MHz)

The RF signal from the antenna is passed through two LPFs (L513, L515, L516, C547, C549, C553, C555 and C556), ANT SW (D506 and D903), and LPF (L402, L403, C407–C411), and then applied to the RF AMP (Q908).

The amplified signal is applied to the radio IC (IC441, pin 4), through the ATT (Q906 and Q907) and limiter (D905).

The radio IC (IC441) demodulates input signals and output to the RX AF circuit.

• RADIO RECEIVE CIRCUITS

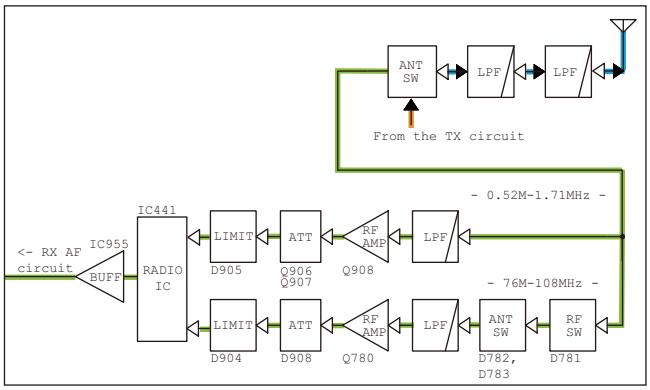

• DIGITAL DEMODULATION AND RX AF CIRCUITS

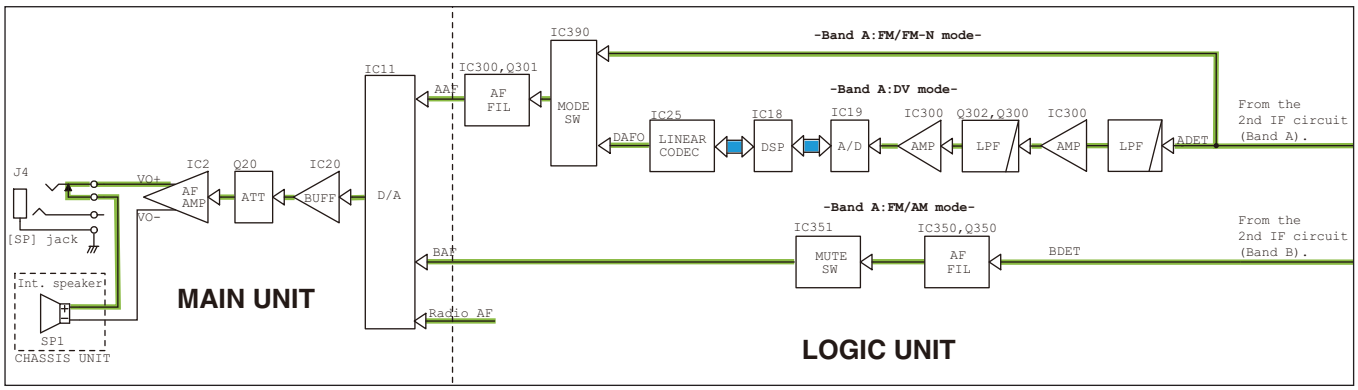

4-2 TRANSMIT CIRCUITS

TX AF CIRCUIT (LOGIC UNIT)

The AF signal from the internal or external microphone (MIC signal) is applied to the audio processor LSI (IC25), through the ATT (R190 and R198).

The audio processor LSI contains 16-bit liner CODEC, MIC AMP, audio filters, D/A converter, and so on.

• When operating in the DV mode

The applied signal is amplified by the MIC AMP, and passed through the external MIC mute SW (IC16, pins 7, 1), and then further amplified by the ALC AMP. The amplified signal is applied to the liner CODEC, through the LPF (R186, C174 and C177), to be encoded into a digital audio signal.

The digital audio signal is processed by the DSP (IC18), and then passed through the LPF (R125 and C124), mode SW (IC390, Q390) and LPF (IC25) ,and then applied to the D/A converter (IC25) to be adjusted in level.

The level-adjusted signal is applied to the modulation circuits.

• When operating in the FM/FM-N mode

The amplified signal is passed through the MIC mute SW (IC16, pins 7, 1), HPF (R130, C160 and C161), BPF (IC25), LPF (IC25) and mode SW (IC390, pins 8, 9), and then applied to the D/A converter (IC25) to be adjusted in level, through the mode SW (IC390, pins 11, 10) and LPF (IC25).

The level-adjusted signal is applied to the modulation circuits.

MODULATION CIRCUITS (MAIN UNIT)

The MIC signal from the TX AF circuits is applied to the VHF VCO (Q311, D304–D306) or UHF VCO (Q27, D10–D12) as a modulation signal.

The modulation signal is applied to D10 to obtain GMSK (For DV mode) or Frequency Modulation (For FM mode).

The modulated VCO output signal is amplified by the buffer (Q200) and LO AMP (Q201), and then applied to the TX AMP circuits as the TX signal, through the LO SW (D14).

• MODULATION CIRCUIT

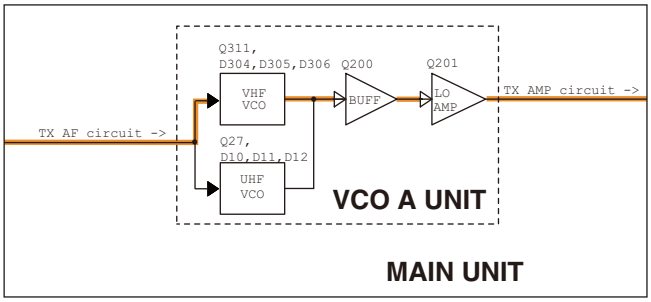

• TX AF CIRCUIT

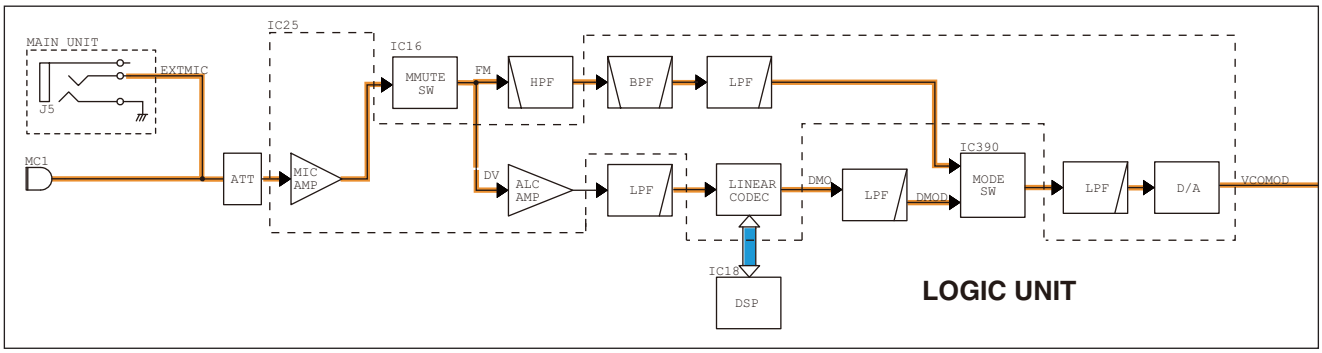

TX AMP CIRCUITS (MAIN UNIT)

The TX signal is passed through the buffer (Q48) and ATT (D20, D21), which controls the TX output power by the APC AMP (IC14). The TX signal is sequentially amplified by the YGR (Q39), drive AMP (Q41) and power AMP (Q45).

• While operating on the VHF band

The amplified TX signal is passed through the LPF (L501, C511), ANT SW (D503 and D504), TX output power detector (D512, D513) and two LPFs (L513, L515, L516, C547, C549, C553, C555 and C556), before being applied to the antenna.

• While operating on the UHF band

The amplified TX signal is passed through the HPF (L502, L503, C507, C508, C510 and C512), ANT SW (D501), TX output power detectors (D505 and D509) and two LPFs (L507, C524, C526, C529, and L511, C536, C539) and HPF (L512, L514, C545, C548, C550, C551 and C554), before being applied to the antenna.

APC CIRCUITS (MAIN UNIT)

The voltage produced at the LPFs (VHF band; L513, L515, L516, C547, C549, C553,C555 and C556, UHF band; L507, C524, C526 and C529) is rectified by the diodes (VHF band; D512 and D513, UHF band; D505 and D509), and it is used as the TX power sensing voltage.

The voltage is applied to the APC AMP (IC14B, pin 6), and the output voltage controls the bias voltages of the ATT (D20 and D21) to keep the TX output power constant.

• TX AMP AND APC CIRCUITS

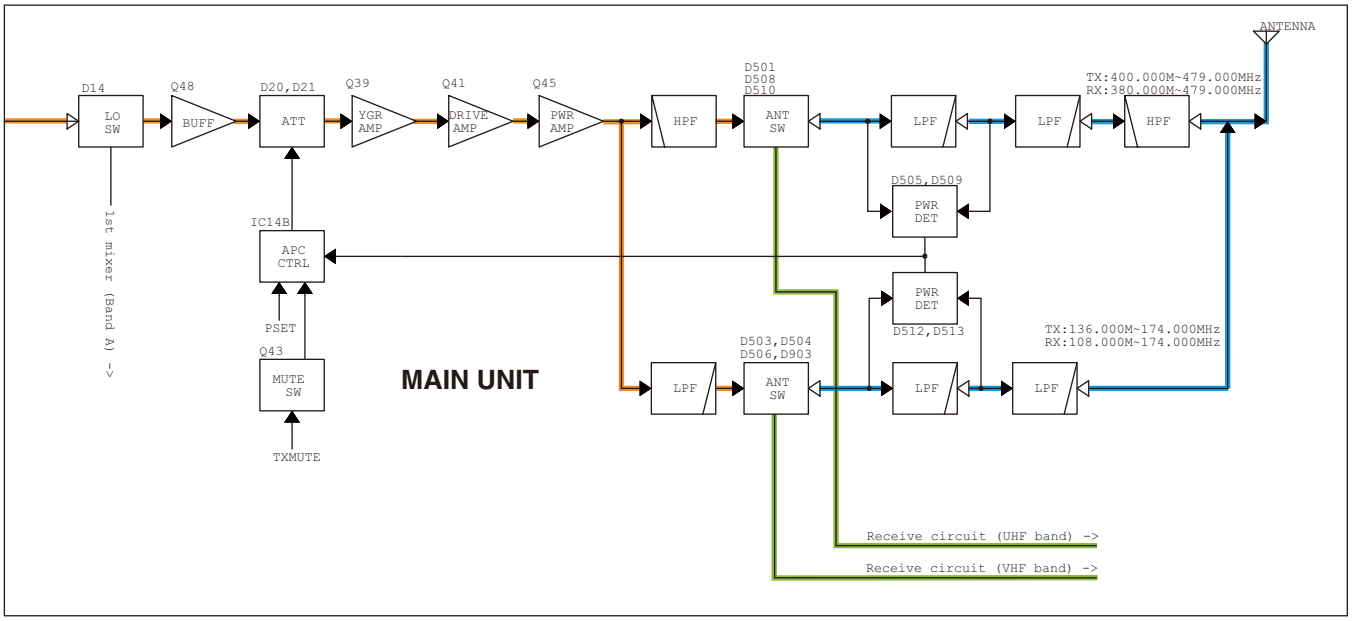

4-3 FREQUENCY SYNTHESIZER CIRCUIT (MAIN UNIT)

VCOs

The ID-51A/E has total of four VCOs; two VCOs for band A and another two for band B.

• Band A

VHF VCO (VCO1 UNIT)

The VHF VCO (Q311, D304–D306) generates both 1st LO signal (for receiving a VHF signal on band A) and the VHF TX signal. The output of buffer (Q200) is amplified by the LO AMP (Q201), and then used as the VHF TX/RX LO signal.

While receiving, the LO signal is applied to the 1st IF mixer (Q820) for receiving a signal on the VHF band, through the RF SW (D821).

While transmitting, the LO signal is applied to the TX AMP circuits, through the LO SW (D14).

UHF VCO (VCO1 UNIT)

The UHF VCO (Q27, D10–D12) generates both 1st LO signal (for receiving a UHF signal on band A) and the UHF TX signal. The output of buffer (Q200) is amplified by the LO AMP (Q201), and then used as the UHF TX/RX LO signal.

While receiving, the LO signal is applied to the 1st IF mixer (Q801) for receiving a signal on the UHF band, through the RF SW (D802).

While transmitting, the LO signal is applied to the TX AMP circuits, through the LO SW (D14).

• Band B

VHF VCO (VCO2 UNIT)

The VHF VCO (Q311, D304–D306) generates the 1st LO signal (for receiving a VHF signal on band B). The output of buffer (Q200) is amplified by the LO AMP (Q201), and then used as the 1st LO signal.

While receiving, the LO signal is applied to the 1st IF mixer (MAIN UNIT: Q830) for receiving a signal on the VHF band, through the RF SW (MAIN UNIT: D831).

UHF VCO (VCO1 UNIT)

The UHF VCO (Q27, D10–D12) generates 1st LO signal (for receiving a UHF signal on band B). The output of buffer (Q200) is amplified by the LO AMP (Q201), and then used as the UHF TX/RX LO signal.

While receiving, the LO signal is applied to the 1st IF mixer (MAIN UNIT: Q811) for receiving a signal on the UHF band, through the RF SW (MAIN UNIT: D812).

PLL

• Band A

A portion of VHF and UHF VCOs output signal is amplified by two buffers (VCO1 UNIT: Q200 and Q202) and passed through the LPF (VCO1 UNIT: L202, C209 to C211), and then fed back to the PLL IC (IC6, pin 8).

The PLL IC (IC6) phase-compares the output of reference frequency oscillator (TCXO; X1) and VCO, and the phase difference is output as the charge pump current. The current is passed though the loop filter (R67, R71, R90, R93, C91, C92, C96 and C102) to be converted into the lock voltage, which controls the oscillating frequency of VCO.

When the oscillation frequency drifts, its phase changes from that of the reference frequency, causing a lock voltage change to compensate for the drift in the VCO oscillating frequency.

Band B

A portion of VHF and UHF VCOs output signal is amplified by two buffers (VCO2 UNIT: Q200 and Q202) and passed through the LPF (VCO2 UNIT: L202, C209 to C211), and then fed back to the PLL IC (IC6, pin 8).

The PLL IC (IC6) phase-compares the output of reference frequency oscillator (TCXO; X1) and VCO, and the phase difference is output as the charge pump current. The current is passed though the loop filter (R452, R454, R455, R457, C455, C457 to C460) to be converted into the lock voltage, which controls the oscillating frequency of VCO.

When the oscillation frequency drifts, its phase changes from that of the reference frequency, causing a lock voltage change to compensate for the drift in the VCO oscillating frequency.

• FREQUENCY SYNTHESIZER CIRCUIT

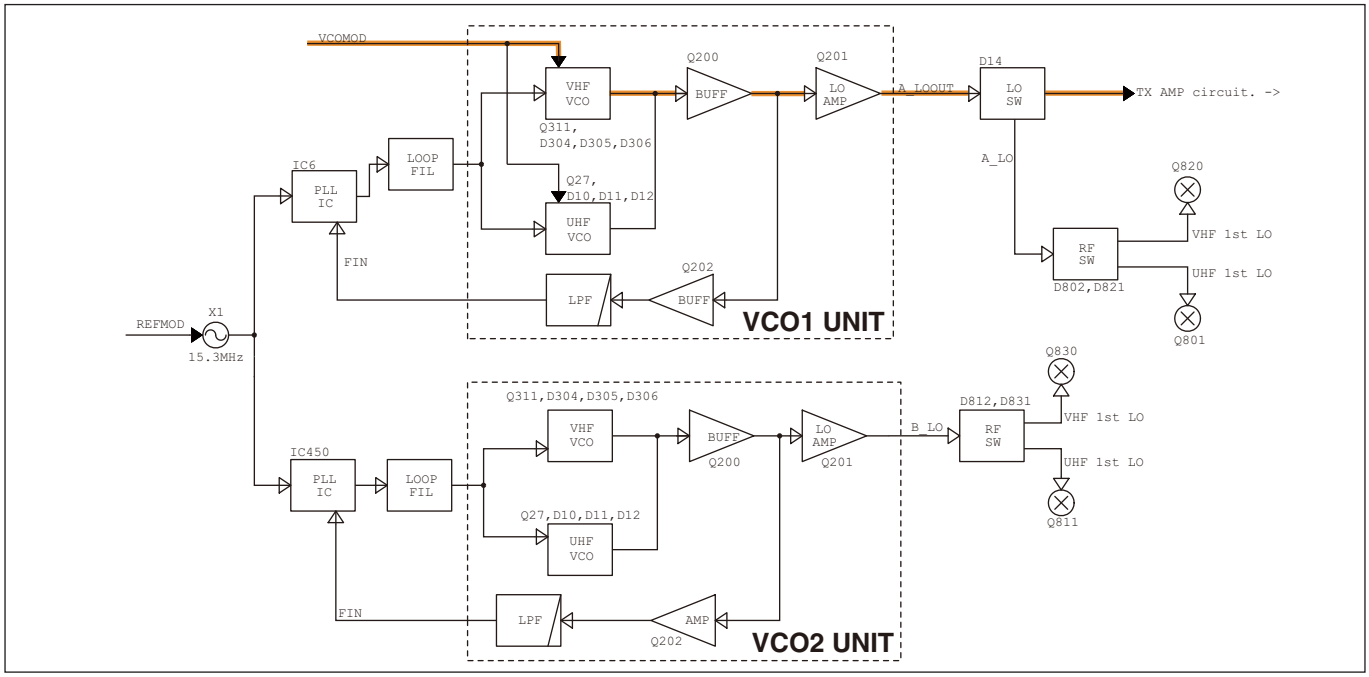

4-4 PORT ALLOCATIONS

• CPU (LOGIC UNIT: IC5)

Pin No.	Line Name	Description	I/O
A10	DICK1	[DIAL] (outer dial) (S12) phase-A	I
A11	AUNLK	PLL unlock detection. (Band A) L=Unlocked.	I
A12	DALD	D/A converter serial strobe.	O
A13	KS0	Key matrix strobe.	O
A14	KS2		
A4	BLV	Lock voltage. (Band B)	I
A5	REMOTE*	Key inputs from the external microphone.	I
A6	VIN	External power supply voltage.	I
A7	ATONE	WX alert signal (1050 Hz). (Band A)	I
A8	TTEMP	TX power AMP temperature sensing voltage.	I
A9	AUDI	Response signal from the audio IC.	I
B1	DTMF	DTMF tone, european tone and beep sound signals.	O
B10	DIUD1	[DIAL] (outer dial) (S12) phase-B	I
B11	CLSFT1**	CPU clock frequency shift control.	O
B13	KS1	Key matrix strobe.	O
B15	KR0	Key matrix return.	I
B4	BRSSI	RSSI voltage. (Band B)	I
B5	ALV	Lock voltage. (Band A)	I
B7	TXI-V	Transmit current sensing voltage.	I
B8	TEMP	Charging circuit temperature sensing voltage.	I
B9	AURES	Audio IC reset. L=Reset.	O
C10	DIUD2	[DIAL] (inner dial) (S12) phase-B.	I
C11	DTCS	TSQL/DTCS filter switching control. H=While the DTCS tone is used.	O
C13	KS3	Key matrix strobe.	O
C14	KR1	Key matrix return.	I
C15	DCIN	External power supply connection detect. L=An external power supply is connected.	I
C2	CTCSS	CTCSS/DTCS tone signal.	O
C4	BCTCIN	TSQL/DTCS tone signal. (Band B)	I

*; Key input sensing voltage.

Pushed key	Voltage range
None of key is pushed.	2.698–3.300 V
VOX headset	2.216–2.468 V
[▼]	1.708–2.213 V
[▲]	1.283–1.705 V
A key	0.932–1.280 V
B key	0.637–0.928 V
Key locked.	0.000–0.634 V

**; Clock frequency shifting range.

Line name	CLSFT1	CLSFT2	Shifting range
Line state	H	H	–1.2 kHz
	H	L	± 0 kHz
	L	L	± 1.2 kHz

Pin No.	Line Name	Description	I/O
C5	VOX	VOX sensing voltage.	I
C7	ACTCIN	TSQL/DTCS tone signal. (Band A)	I
C9	CLSFT2**	Clock frequency shift control.	O
D1	DATA	Common serial clock to the PLL, D/A converter, expander and audio IC.	O
D10	DICK2	[DIAL] (inner dial) (S12) phase-A.	I
D11	CK	Common serial clock to the PLL, D/A converter, expander and audio IC.	O
D12	KR2	Key matrix return.	I
D13	BTDET	Battery type detection. L=An appropriate battery pack is attached.	I
D14	PWRSW	[POWER] key input. L=Pushed.	I
D15	SCLK_R	Radio IC serial clock.	O
D2	G_RXD	UART data from the internal GPS module.	I
D4	BTONE	WX alert signal (1050Hz). (Band B)	I
D5	BTSENC	Battery type detection.	I
D6	BTVIN	Battery voltage.	I
D7	ARSSI	RSSI voltage. (Band A)	I
D8	AUSTB	Audio IC serial strobe.	O
D9	SEN_R	Radio IC serial strobe.	O
E13	RES_R	Radio IC reset. L=Reset.	O
E14	SDIO_R	Radio IC serial data.	I/O
E4	G_TXD	UART data to the internal GPS module.	O
F12	CHGC	Charging circuit control. H=While charging.	O
F13	TXLED	TX LED control. H=Lights.	O
F14	FMMUTE	RX AF mute control. H=While receiving in the FM/FM-N mode.	O
F15	BLED	Busy LED control. H=Lights.	O
G12	INTMIC	MIC line switching control. H=While the internal MIC is used.	O
G14	CHGH	Charging current control. H=While charging using.	O
G15	PCON	Main power supply line control. H=Power ON.	O
G3	LIGHT	LCD backlit and key backlit control. H=Light.	O
G4	DIM	LCD backlit and key backlit brightness control. H=Bright.	O
H12	G_WKUP	GPS module wake-up control. H=Power ON.	I
J1	BR3C	Receive circuit power control. (Band B) H=While receiving on band B.	O
J12	MMUTE	MIC mute control. H=Mute.	O

• CPU (LOGIC UNIT: IC5) (continued)

Pin No.	Line Name	Description	I/O
J13	IOEN	Expander chip enable.	O
J15	DCSFT	DSP clock shift control. L=+600 Hz shifted.	O
J2	BPLLSTB	PLL serial strobe. (Band B)	O
J4	RTC_IRQ	Interrupt detection from the real time clock IC. L=Alerm detected.	I
K1	ANOISE	Noise level detection. (Band A) H=Noise signal is detected.	I
K13	BAFMUTE	RX AF mute control. (Band B) L=Mute.	O
K14	D_AS	Modulation signal line (DV/FM) switching control. H=While transmitting in the DV mode.	O
K15	DAFS	2nd IF filter (digital/analog) switching control. H=While receiving in the DV mode.	O
K2	EBUSY	CI-V bus line communication status detection. L=Busy.	I
K3	IOSTB1	Expander serial strobe.	O
L1	R3C	R3 line control. L=While recieiving.	O
L12	SQL	SQL key input. L=Pushed.	I
L13	BNOISE	Noise level detection (Band B). H=Noise signal is detected.	I
L14	PSC	5VS power supply line control. L=While in the power save mode.	O
L15	3VC	3VS power supply line control. H=Power ON.	O
L2	PLAY	Modulation signal line switching control. H=Recorded audio is transmitted.	O
L3	BAM	AM （Air band）receive circuit power control. L=While receiving in the AM mode.	O
M1	DASTB1	D/A converter serial strobe.	O
M12	TX232	UART data (RS-232C). (4800/9600/38400 bps)	O
M14	ESIO	EEPROM serial data.	I/O
M15	T3C	Transmit circuit power control. H=While transmitting.	O
M2	CLOUT	CI-V/CLONE UART data. (300–38400 bps)	O
M5	DSP_STB	DSP serial strobe.	O
M6	DSPC	DSP power control. H=DSP is ON.	O
M7	AR3C	Receive circuit power control. (Band A) L=While receiving on band A.	O
M8	LCDRS	LCD driver serial data.	O
M9	LCDCS	LCD driver chip select.	O
N1	CLIN	CI-V/CLONE UART data. (300–38400 bps)	I
N12	G_HIB	GPS module operating mode (Normal/Sleep) switching control. L=While in the sleep mode.	O

Pin No.	Line Name	Description	I/O
N15	ECK	EEPROM serial clock.	O
N2	SD_SENC	microSD card insert detection. L=Inserted.	I
N3	SD_TXD	Serial data to the attached microSD card.	O
N4	DSP_SI	DSP serial data.	I
N6	RTC_SDA	Serial data to/from the real time clock IC.	I/O
N7	APLLSTB	PLL serial strobe. (Band A)	O
N9	LCDDT	LCD driver serial data.	O
P1	SD_CS	Chip select to the attached microSD card.	O
P12	GPSC	GPS module power control. H=Power ON.	O
P13	RX232	RS-232C UART data. (4800/9600 bps)	I
P14	INTPTT	[PTT] key input. L=Pushed.	I
P2	SD_SCK	Serial clock to the attached microSD card.	O
P4	DSP_CK	DSP serial clock.	O
P5	DSP_PD	DSP power down control. H=Power down.	O
P6	LCDRES	LCD driver reset. L=Reset.	O
R1	SD_RXD	Serial data from the attached microSD card.	I
R13	AFON	AF AMP power control.	O
R14	EXTPTT	External PTT input.	I
R2	DSP_SO	DSP serial data.	O
R5	DSP_RESET	DSP reset control. L=Reset.	O
R6	RTC_SCL	Serial clock to the real time clock IC.	O
R8	LCDCK	LCD driver serial clock.	O

SECTION 5 ADJUSTMENT PROCEDURE

5-1 PREPARATION

■ REQUIRED EQUIPMENTS

EQUIPMENT	GRADE AND RANGE	EQUIPMENT	GRADE AND RANGE
Power supply	Voltage range : 1–15 V Current capacity : More than 3 A	JIG cables	Modified 3-conductor plugs (See the illustration below)
Audio generator (AG)	Frequency range : 300–3000 Hz Output level : 1–500 mV	Attenuator	Power attenuation : 40 dB Capacity : More than 10 W
Modulation Analyzer	Frequency range : 30–600 MHz Measuring range : 0 to ±10 kHz	Standard signal generator (SSG)	Frequency range : 0.1–600 MHz Output level : –20 dBμ to 90 dBμ (–127 to –17 dBm)
AC millivoltmeter	Measuring range : 10 mV to 10 V	Frequency counter	Frequency range : 0.1–600 MHz Frequency accuracy : ±1 ppm or better Input level : Less than 1 mW
RF power meter (50 Ω terminated)	Measuring range : 0.1–10 W Frequency range : 100–600 MHz SWR : Less than 1.2 : 1		

■ JIG CABLES

• JIG cable #1

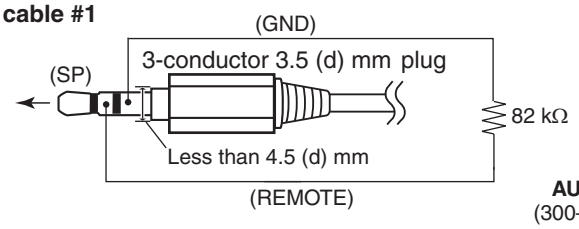

• JIG cable #2

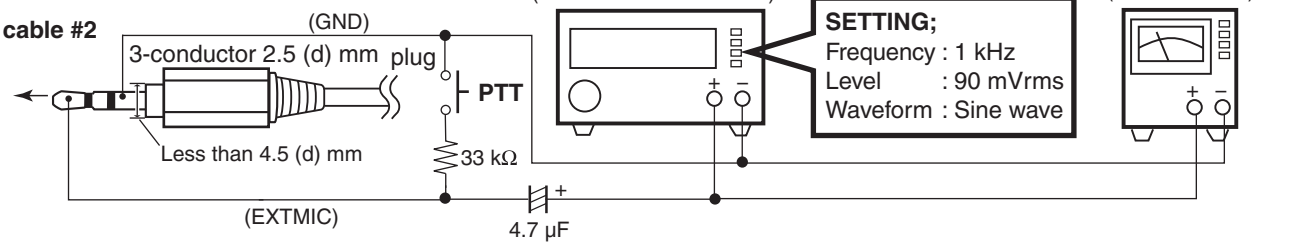

■ CONNECTION

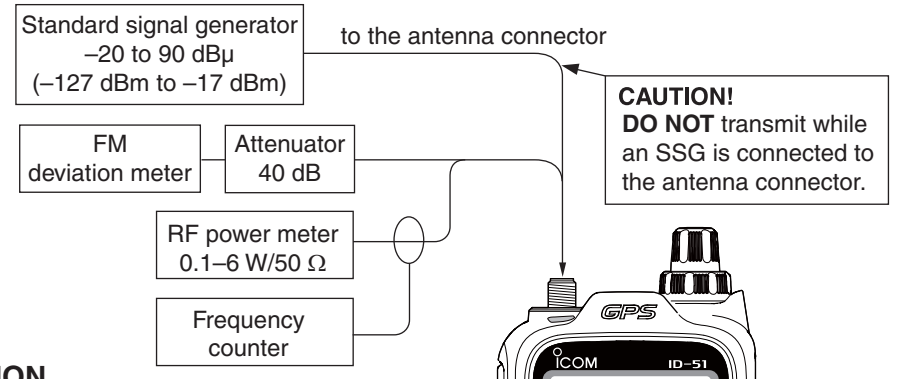

POWER SUPPLY CONNECTION

• Adjustment at 13.5 V

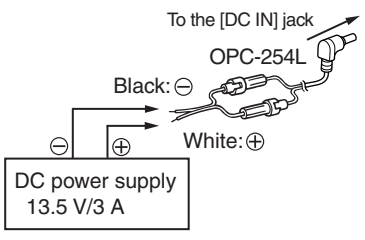

• Adjustment at 5.5 V or 7.4 V

Be sure about the polarity

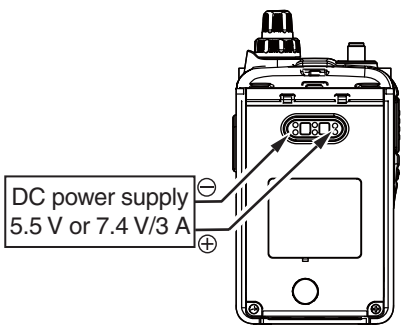

• ENTERING THE ADJUSTMENT MODE

1) Connect the JIG cable “#1” to **[SP]**. (See page 5-1)
2) While holding down **[SQL]** and [QUICK SPCH], turn ON the power.

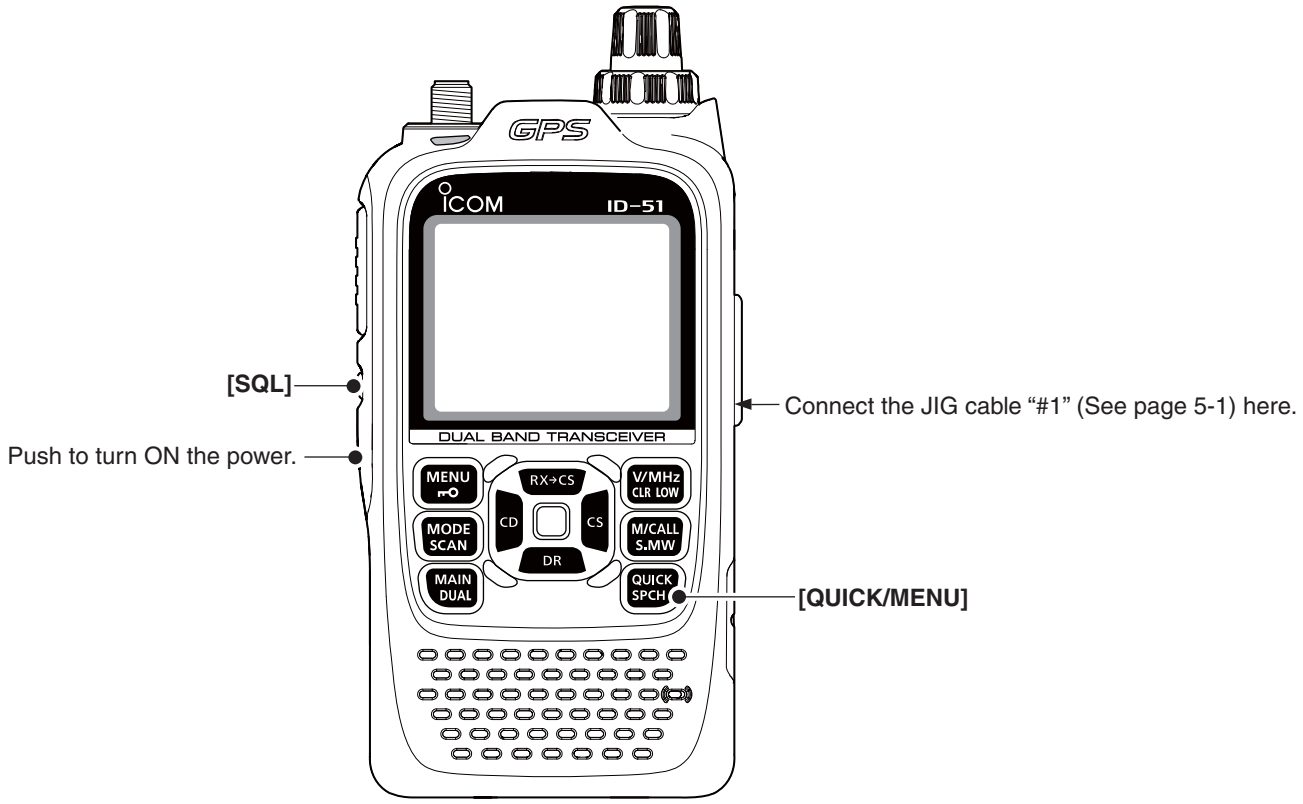

• KEY ASSIGNMENTS FOR THE ADJUSTMENT MODE

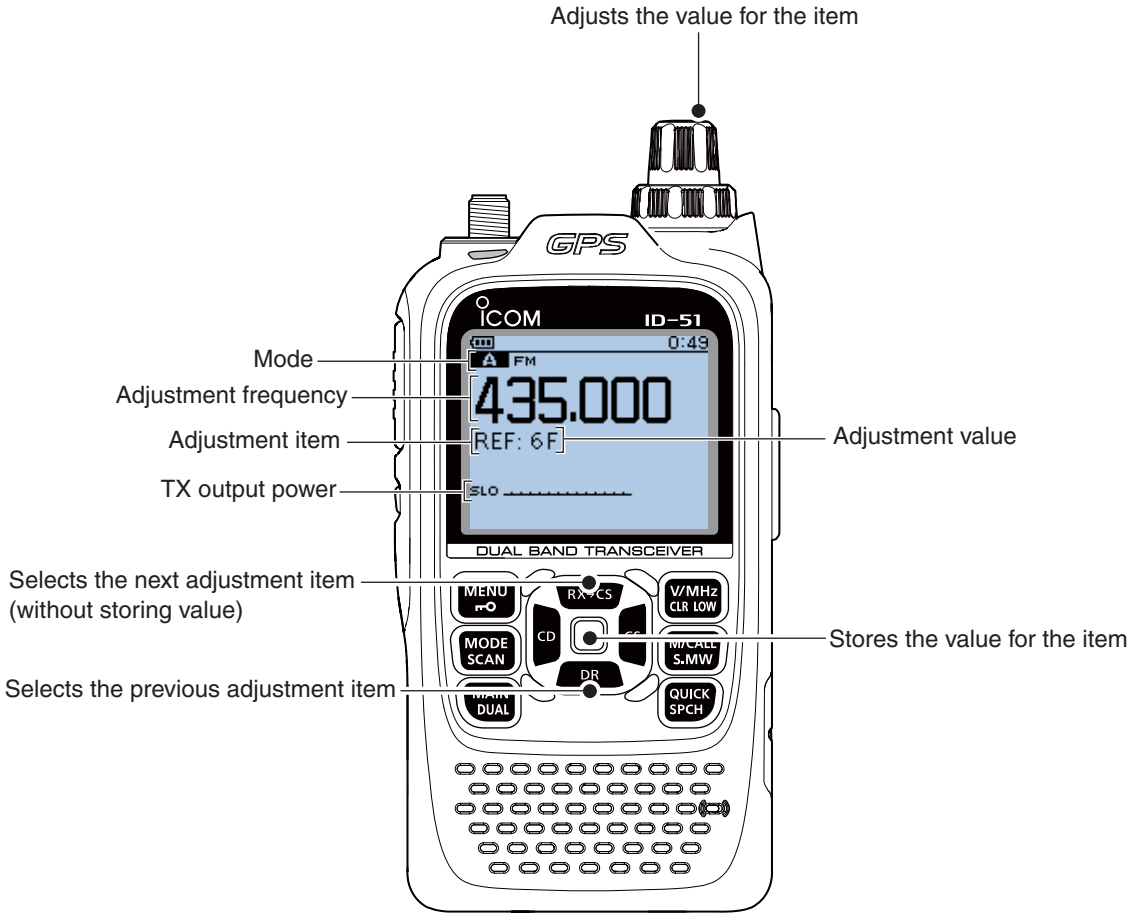

• QUITING THE ADJUSTMENT MODE

1) Remove the JIG cable “#1” from **[SP]**.
2) Turn OFF the power, and then turn ON the power.

5-2 FREQUENCY ADJUSTMENT

Select an adjustment item using RX•CS / DR, and then set the adjustment value as specified using **[DIAL]**.

ADJUSTMENT	ADJUSTMENT ITEM	OPERATION		VALUE
REFERENCE FREQUENCY	[REF]	1	1) Set the power supply voltage to 7.4 V. 2) Connect a power meter or dummy load to the antenna connector. 3) Loosely couple a frequency counter to the antenna connector. 4) While transmitting, adjust the frequency using **[DIAL]**, and then push ▢ to store the adjustment value.	Displayed frequecny (±200 Hz)

5-3 TRANSMIT ADJUSTMENT

• IDLING CURRENT ADJUSTMENT (at 5.5 V)

Select an adjustment item using RX•CS / DR, and then set the adjustment value as specified using **[DIAL]**.

ADJUSTMENT	ADJUSTMENT ITEM	OPERATION		VALUE
DRIVE AMP IDLING CURRENT (At 5.5 V)	[ID5]	1	1) Set the power supply voltage to 5.5 V. 2) Connect an RF power meter to the antenna connector. 3) Connect an ammeter between the power supply and transceiver. 4) Set the item **[IP5]** to "00."	–
VHF		2	• While transmitting, adjust the idling current using **[DIAL]**, and then push ▢ to store the adjustment value.	150–170 mA
UHF				140–160 mA
FINAL AMP IDLING CURRENT (At 5.5 V)	[IP5]	1	1) Set the power supply voltage to 5.5 V. 2) Connect an RF power meter to the antenna connector. 3) Connect an ammeter between the power supply and transceiver.	–
VHF		2	• While transmitting, adjust the idling current using **[DIAL]**, and then push ▢ to store the adjustment value.	180–280 mA
UHF				170–270 mA

5-3 TRANSMIT ADJUSTMENT (Continued)

• IDLING CURRENT ADJUSTMENT (at 7.4 V)

Select an adjustment item using RX•CS / DR, and then set the adjustment value as specified using **[DIAL]**.

ADJUSTMENT	ADJUSTMENT ITEM		OPERATION	VALUE
DRIVE AMP IDLING CURRENT (At 7.4 V)	[ID7]	1	1) Set the power supply voltage to 7.4 V. 2) Connect an RF power meter to the antenna connector. 3) Connect an ammeter between the power supply and transceiver. 4) Set the item **[IP7]** to "00."	–
VHF (Hi power)		2	• While transmitting, adjust the idling current using **[DIAL]**, and then push ▢ to store the adjustment value.	190–210 mA
(Mid power)		3		140–160 mA
(Low2 power)		4		120–140 mA
(Low1 power)		5		
(S-Low power)		6		
UHF (Hi power)		7		230–250 mA
(Mid power)		8		130–150 mA
(Low2 power)		9		110–130 mA
(Low1 power)		10		
(S-Low power)		11		
FINAL AMP IDLING CURRENT (At 7.4 V)	[IP7]	1	1) Set the power supply voltage to 7.4 V. 2) Connect an RF power meter to the antenna connector. 3) Connect an ammeter between the power supply and transceiver.	–
VHF (Hi power)		2	• While transmitting, adjust the idling current using **[DIAL]**, and then push ▢ to store the adjustment value.	800–900 mA
(Mid power)		3		450–550 mA
(Low2 power)		4		150–250 mA
(Low1 power)		5		
(S-Low power)		6		
UHF (Hi power)		7		790–890 mA
(Mid power)		8		440–540 mA
(Low2 power)		9		140–240 mA
(Low1 power)		10		
(S-Low power)		11		

NOTE: When "**IDLING CURRENT**" is adjusted, "**TRANSMIT POWER**" must be alos re-adjusted.

5-3 TRANSMIT ADJUSTMENT (Continued)

• IDLING CURRENT ADJUSTMENT (at 13.5 V)

Select an adjustment item using [RX→CS]/[DR], and then set the adjustment value as specified using **[DIAL]**.

ADJUSTMENT	ADJUSTMENT ITEM		OPERATION	VALUE
DRIVE AMP IDLING CURRENT (At 13.5 V)	[ID1]	1	1) Set the power supply voltage to 13.5 V. (supplying from **[DC IN]**) 2) Connect an RF power meter to the antenna connector. 3) Connect an ammeter between the power supply and transceiver. 4) Set the item **[IP1]** to "00."	–
VHF (Hi power)		2	• While transmitting, adjust the idling current using **[DIAL]**, and then push ▢ to store the adjustment value.	100–120 mA
(Mid power)		3		90–110 mA
(Low2 power)		4		80–100 mA
(Low1 power)		5		
(S-Low power)		6		
UHF (Hi power)		7		95–115 mA
(Mid power)		8		85–105 mA
(Low2 power)		9		75–95 mA
(Low1 power)		10		
(S-Low power)		11		
FINAL AMP IDLING CURRENT (At 13.5 V)	[IP1]	1	1) Set the power supply voltage to 13.5 V. (supplying from **[DC IN]**) 2) Connect an RF power meter to the antenna connector. 3) Connect an ammeter between the power supply and transceiver.	–
VHF (Hi power)		2	• While transmitting, adjust the idling current using **[DIAL]**, and then push ▢ to store the adjustment value.	500–620 mA
(Mid power)		3		310–410 mA
(Low2 power)		4		110–210 mA
(Low1 power)		5		
(S-Low power)		6		
UHF (Hi power)		7		500–620 mA
(Mid power)		8		310–410 mA
(Low2 power)		9		110–210 mA
(Low1 power)		10		
(S-Low power)		11		

NOTE: When "**IDLING CURRENT**" is adjusted, "**TRANSMIT POWER**" must be also re-adjusted.

5-3 TRANSMIT ADJUSTMENT (Continued)

• TRANSMIT POWER ADJUSTMENT (at 5.5 V)

Select an adjustment item using [RX•CS]/[DR], and then set the adjustment value as specified using **[DIAL]**.

ADJUSTMENT	ADJUSTMENT ITEM		OPERATION	VALUE
TRANSMIT POWER	[PO5]	1	1) Set the power supply voltage to 5.5 V. 2) Connect an RF power meter to the antenna connector. 3) While transmitting, adjust the TX power using **[DIAL]**, and then push [▢] to store the adjustment value.	80–120 mW
-VHF- (BAND LOW)		2		
(BAND HIGH)		3		
-UHF- (BAND LOW)		4		
(BAND HIGH)		5		

NOTE: When "**IDLING CURRENT**" is adjusted, "**TRANSMIT POWER**" must be also re-adjusted.

• TRANSMIT POWER ADJUSTMENT (at 7.4 V)

Select an adjustment item using [RX•CS]/[DR], and then set the adjustment value as specified using **[DIAL]**.

ADJUSTMENT	ADJUSTMENT ITEM		OPERATION	VALUE
TRANSMIT POWER		1	1) Set the power supply voltage to 7.4 V. 2) Connect an RF power meter to the antenna connector.	–
-VHF- (Hi power) [BAND LOW]		2	• While transmitting, adjust the TX power using **[DIAL]**, and then push [▢] to store the adjustment value.	4.8–5.2 W
[BAND HIGH]		3		
-UHF- (Hi power) [BAND LOW]		4		
[BAND HIGH]		5		
-VHF- (Mid power) [BAND LOW]		6		2.3–2.7 W
[BAND HIGH]		7		
-UHF- (Mid power) [BAND LOW]		8		
[BAND HIGH]		9		
-VHF- (Low2 power) [BAND LOW]		10		0.9–1.1 W
[BAND HIGH]		11		
-UHF- (Low2 power) [BAND LOW]		12		
[BAND HIGH]		13		
-VHF- (Low1 power) [BAND LOW]		14		0.4–0.6 W
[BAND HIGH]		15		
-UHF- (Low1 power) [BAND LOW]		16		
[BAND HIGH]		17		
-VHF- (S-Low power) [BAND LOW]		18		80–120 mW
[BAND HIGH]		19		
-UHF- (S-Low power) [BAND LOW]		20		
[BAND HIGH]		21		

5-3 TRANSMIT ADJUSTMENT (Continued)

• TRANSMIT POWER ADJUSTMENT (at 13.5 V)

Select an adjustment item using [RX→CS]/[DR], and then set the adjustment value as specified using **[DIAL]**.

ADJUSTMENT	ADJUSTMENT ITEM		OPERATION	VALUE
TRANSMIT POWER	–	1	1) Set the power supply voltage to 13.5 V. (supplying from **[DC IN]**) 2) Connect an RF power meter to the antenna connector.	–
-VHF- **(Hi power)** **[BAND LOW]**	[PO1]	2	• While transmitting, adjust the TX power using **[DIAL]**, and then push [▢] to store the adjustment value.	4.8–5.2 W
[BAND HIGH]		3		
-UHF- **(Hi power)** **[BAND LOW]**		4		
[BAND HIGH]		5		
-VHF- **(Mid power)** **[BAND LOW]**		6		2.3–2.7 W
[BAND HIGH]		7		
-UHF- **(Mid power)** **[BAND LOW]**		8		
[BAND HIGH]		9		
-VHF- **(Low2 power)** **[BAND LOW]**		10		0.9–1.1 W
[BAND HIGH]		11		
-UHF- **(Low2 power)** **[BAND LOW]**		12		
[BAND HIGH]		13		
-VHF- **(Low1 power)** **[BAND LOW]**		14		0.4–0.6 W
[BAND HIGH]		15		
-UHF- **(Low1 power)** **[BAND LOW]**		16		
[BAND HIGH]		17		
-VHF- **(S-Low power)** **[BAND LOW]**		18		80–120 mW
[BAND HIGH]		19		
-UHF- **(S-Low power)** **[BAND LOW]**		20		
[BAND HIGH]		21		

5-3 TRANSMIT ADJUSTMENT (Continued)

• DEVIATION ADJUSTMENTS

Select an adjustment item using RX•CS / DR, and then set the adjustment value as specified using **[DIAL]**.

ADJUSTMENT	ADJUSTMENT ITEM		OPERATION	VALUE
FM DEVIATION	–	1	1) Set the power supply voltage to 7.4 V. 2) Connect a modulation analyzer to the antenna connector through an attenuator, and set it as; HPF : OFF LPF : 20 kHz De-emphasis : OFF Detector : (P-P)/2 3) Connect an audio generator to the JIG cable (See page 5-1).	–
-VHF- **[FM (BAND LOW)]**	[MFL]	2	1) Set the audio generator as; Frequency : 1 kHz Level : 90 mVrms 2) While transmitting, adjust the deviation using **[DIAL]**, and then push ▢ to store the adjustment value.	±4.1 to ±4.3 kHz
[FM-N (BAND LOW)]	[MNL]	3		±2.0 to ±2.2 kHz
[FM (BAND HIGH)]	[MFH]	4		±4.1 to ±4.3 kHz
[FM-N (BAND HIGH)]	[MNH]	5		±2.0 to ±2.2 kHz
-UHF- **[FM (BAND LOW)]**	[MFL]	6		±4.1 to ±4.3 kHz
[FM-N (BAND LOW)]	[MNL]	7		±2.0 to ±2.2 kHz
[FM (BAND HIGH)]	[MFH]	8		±4.1 to ±4.3 kHz
[FM-N (BAND HIGH)]	[MNH]	9		±2.0 to ±2.2 kHz
REFERENCE SIGNAL DEVIATION **-VHF-** **[FM (BAND LOW)]**	[BFL]	1	1) Set the audio generator as; Level : 0 mVrms (OFF) 2) While transmitting, adjust the deviation using **[DIAL]**, and then push ▢ to store the adjustment value.	Minimum deviation
[FM-N (BAND LOW)]	[BNL]	2		
[FM (BAND HIGH)]	[BFH]	3		
[FM-N (BAND HIGH)]	[BNH]	4		
-UHF- **[FM (BAND LOW)]**	[BFL]	5		
[FM-N (BAND LOW)]	[BNL]	6		
[FM (BAND HIGH)]	[BFH]	7		
[FM-N (BAND HIGH)]	[BNH]	8		
DV DEVIATION	–	1	1) Set the power supply voltage to 7.4 V. 2) Connect a modulation analyzer to the antenna connector through an attenuator, and then set it as; HPF : OFF LPF : 20 kHz De-emphasis : OFF Detector : (P-P)/2 3) No audio signal is applied.	–
-VHF- **[BAND LOW]**	[DVV]	2	• While transmitting, adjust the deviation using **[DIAL]**, and then push ▢ to store the adjustment value.	±0.95 to ±1.15 kHz
[BAND CENTER]		3		
[BAND HIGH]		4		
-UHF- **[BAND LOW]**		5		
[BAND CENTER]		6		
[BAND HIGH]		7		

5-3 TRANSMIT ADJUSTMENT (Continued)

• DEVIATION ADJUSTMENTS (Continued)

Select an adjustment item using RX•CS / DR, and then set the adjustment value as specified using **[DIAL]**.

ADJUSTMENT	ADJUSTMENT ITEM		OPERATION	VALUE
DV BALANCE	–	1	1) Set the power supply voltage to 7.4 V. 2) Connect a modulation analyzer to the antenna connector through an attenuator, and then set it as; HPF : OFF LPF : 20 kHz De-emphasis : OFF Detector : (P-P)/2 3) No audio signal is applied.	–
-VHF- **[BAND LOW]**	[DVR]	2	• While transmitting, adjust the deviation using **[DIAL]**, and then push ▢ to store the adjustment value.	Minimum deviation
[BAND CENTER]		3		
[BAND HIGH]		4		
-UHF- **[BAND LOW]**		5		
[BAND CENTER]		6		
[BAND HIGH]		7		

5-3 TRANSMIT ADJUSTMENT (Continued)

• TONE DEVIATION ADJUSTMENTS

Select an adjustment item using RX•CS / DR, and then set the adjustment value as specified using **[DIAL]**.

ADJUSTMENT	ADJUSTMENT ITEM		OPERATION	VALUE
TONE DEVIATION	–	1	1) Set the power supply voltage to 7.4 V. 2) Connect a modulation analyzer to the antenna connector through an attenuator, and then set it as; HPF : OFF LPF : 20 kHz De-emphasis : OFF Detector : (P-P)/2 3) No audio signal is applied.	–
-VHF- **[DTCS]** **(FM)**	[MDT]	2	• While transmitting, adjust the deviation using **[DIAL]**, and then push ▢ to store the adjustment value.	±0.7 to ±0.8 kHz
(FM-N)				±0.325 to ±0.425 kHz
[CTCSS] **(FM)**	[MCT]	3		±0.7 to ±0.8 kHz
(FM-N)				±0.325 to ±0.425 kHz
[DTMF] **(FM)**	[MDM]	4		±3.4 to ±3.6 kHz
(FM-N)				±1.65 to ±1.85 kHz
[EURO TONE] **(FM)**	[MET]	5		±3.4 to ±3.6 kHz
(FM-N)				±1.65 to ±1.85 kHz
-UHF- **[DTCS]** **(FM)**	[MDT]	6		±0.7 to ±0.8 kHz
(FM-N)		7		±0.325 to ±0.425 kHz
[CTCSS] **(FM)**	[MCT]	8		±0.7 to ±0.8 kHz
(FM-N)		9		±0.325 to ±0.425 kHz
[DTMF] **(FM)**	[MDM]	10		±3.4 to ±3.6 kHz
(FM-N)		11		±1.65 to ±1.85 kHz
[EURO TONE] **(FM)**	[MET]	12		±3.4 to ±3.6 kHz
(FM-N)		13		±1.65 to ±1.85 kHz

5-4 RECEIVE ADJUSTMENTS

1) Select an adjustment item (band) using [RX•CS]/[DR].
2) Set the SSG as specified (frequency, deviation and output level), and then push [▢] to automatically adjust.

ADJUSTMENT	ADJUSTMENT ITEM		OPERATION	VALUE
RECEIVE SENSITIVITY [A-BAND]	**NOTE:** "**RECEIVE SENSITIVITY**" must be adjusted before "**S-METER**." Otherwise, "**S-METER**" will not be adjusted properly.			
	–	1	1) Set the power supply voltage to 7.4 V. 2) Connect an SSG to the antenna connector, and then set it as; Frequency : (Displayed on the function display) Level : –10 dBμ (–117 dBm)† Modulation : 1 kHz Deviation : 3.5 kHz	–
(137.02 MHz)	[VTL]	2		Push [▢]. (Automatic adjustment)
(145.02 MHz)	[VTM]	3		
(173.98 MHz)	[VTH]	4		
(380.02 MHz)	[UTL]	5		
(435.02 MHz)	[UTM]	6		
(478.98 MHz)	[UTH]	7		
[AIR BAND]	–	1	1) Set the power supply voltage to 7.4 V. 2) Connect an SSG to the antenna connector, and then set it as; Frequency : (Displayed on the function display) Level : –10 dBμ (–117 dBm)† Modulation : 1 kHz Deviation : 30% (AM)	–
(108.02 MHz)	[ATL]	2		Push [▢]. (Automatic adjustment)
(127.02 MHz)	[ATM]	3		
(136.95 MHz)	[ATH]	4		
[B-BAND]	–	1	1) Set the power supply voltage to 7.4 V. 2) Connect an SSG to the antenna connector, and then set it as; Frequency : (Displayed on the function display) Level : –10 dBμ (–117 dBm)† Modulation : 1 kHz Deviation : 3.5 kHz	–
(137.02 MHz)	[VTL]			Push [▢]. (Automatic adjustment)
(145.02 MHz)	[VTM]	2		
(173.98 MHz)	[VTH]	3		
(380.02 MHz)	[UTL]	4		
(435.02 MHz)	[UTM]	5		
(478.98 MHz)	[UTH]	6		
S-METER [BC BAND]	**NOTE:** "**RECEIVE SENSITIVITY**" must be adjusted before "**S-METER**" and "**S-METER S3 LEVEL**." Otherwise, "**S-METER**" and "**S-METER S3 LEVEL** will not be adjusted properly.			
	–	1	1) Set the power supply voltage to 7.4 V. 2) Connect an SSG to the antenna connector and set it as; Modulation : 1 kHz Deviation : 30% (AM)	–
(AM S0 level)	[BS0]	2	• Set the SSG as; Frequency : (Displayed on the function display) Level : +2 dBμ (–105 dBm)†	Push [▢]. (Automatic adjustment)
(AM S3 level)	[BS3]	3	• Set the SSG as; Level : +5 dBμ (–102 dBm)†	
(AM Full scale)	[BSF]	4	• Set the SSG as; Frequency : (Displayed on the function display) Level : +12 dBμ (–95 dBm)†	
(WFM S0 level)	[BS0]	5	• Set the SSG as; Frequency : (Displayed on the function display) Level : +2 dBμ (–105 dBm)†	
(WFM S3 level)	[BS3]	6	• Set the SSG as; Frequency : (Displayed on the function display) Level : +5 dBμ (–102 dBm)†	
(WFM Full scale)	[BSF]	7	• Set the SSG as; Frequency : (Displayed on the function display) Level : +12 dBμ (–95 dBm)†	

†; This output level of a standard signal generator (SSG) is indicated as SSG's open circuit.

5-4 RECEIVE ADJUSTMENTS (Continued)

1) Select an adjustment item (band) using [RX•CS]/[DR].
2) Set the SSG as specified (frequency, deviation and output level), and then push [▢] to automatically adjust.

ADJUSTMENT	ADJUSTMENT ITEM		OPERATION	VALUE
S-METER [A-BAND]	**NOTE:** "**RECEIVE SENSITIVITY**" must be adjusted before "**S-METER**" and "**S-METER S3 LEVEL**." Otherwise, "**S-METER**" and "**S-METER S3 LEVEL** will not be adjusted properly.			
	–	1	1) Set the power supply voltage to 7.4 V. 2) Connect an SSG to the antenna connector and set it as; Modulation : 1 kHz Deviation : 3.5 kHz	–
(VHF S0 level)	[VS0]	2	• Set the SSG as; Frequency : (Displayed on the function display) Level : –10 dBμ (–117 dBm)†	Push [▢]. (Automatic adjustment)
(VHF S3 level)	[VS3]	3	• Set the SSG as; Frequency : (Displayed on the function display) Level : –6 dBμ (–113 dBm)†	
(VHF Full scale)	[VSF]	4	• Set the SSG as; Level : +10 dBμ (–97 dBm)†	
(UHF S0 level)	[US0]	5	• Set the SSG as; Frequency : (Displayed on the function display) Level : –10 dBμ (–117 dBm)†	
(UHF S3 level)	[US3]	6	• Set the SSG as; Frequency : (Displayed on the function display) Level : –6 dBμ (–113 dBm)†	
(UHF Full scale)	[USF]	7	• Set the SSG as; Frequency : (Displayed on the function display) Level : +10 dBμ (–97 dBm)†	
S-METER [AIR BAND]	**NOTE:** "**RECEIVE SENSITIVITY**" must be adjusted before "**S-METER**" and "**S-METER S3 LEVEL**." Otherwise, "**S-METER**" and "**S-METER S3 LEVEL** will not be adjusted properly.			
	–	1	1) Set the power supply voltage to 7.4 V. 2) Connect an SSG to the antenna connector and set it as; Modulation : 1 kHz Deviation : 30% (AM)	–
(AIR S0 level)	[AS0]	2	• Set the SSG as; Frequency : (Displayed on the function display) Level : –10 dBμ (–117 dBm)†	Push [▢]. (Automatic adjustment)
(AIR S3 level)	[AS3]	3	• Set the SSG as; Frequency : (Displayed on the function display) Level : –6 dBμ (–113 dBm)†	
(AIR Full scale)	[ASF]	4	• Set the SSG as; Frequency : (Displayed on the function display) Level : +10 dBμ (–97 dBm)†	
S-METER [B BAND]	–	1	1) Set the power supply voltage to 7.4 V. 2) Connect an SSG to the antenna connector, and then set it as; Frequency : (Displayed on the function display) Modulation : 1 kHz Deviation : 3.5 kHz	–
(VHF S0 level)	[VS0]	2	• Set the SSG as; Frequency : (Displayed on the function display) Level : –10 dBμ (–117 dBm)†	Push [▢]. (Automatic adjustment)
(VHF S3 level)	[VS3]	3	• Set the SSG as; Frequency : (Displayed on the function display) Level : –6 dBμ (–113 dBm)†	
(VHF Full scale)	[VSF]	4	• Set the SSG as; Frequency : (Displayed on the function display) Level : +10 dBμ (–97 dBm)†	
(UHF S0 level)	[US0]	5	• Set the SSG as; Frequency : (Displayed on the function display) Level : –10 dBμ (–117 dBm)†	
(UHF S3 level)	[US3]	6	• Set the SSG as; Frequency : (Displayed on the function display) Level : –6 dBμ (–113 dBm)†	
(UHF Full scale)	[USF]	7	• Set the SSG as; Frequency : (Displayed on the function display) Level : +10 dBμ (–97 dBm)†	

†; This output level of a standard signal generator (SSG) is indicated as SSG's open circuit.

5-4 RECEIVE ADJUSTMENTS (Continued)

1) Select an adjustment item (band) using [RX•CS]/[DR].
2) Set the SSG as specified (frequency, deviation and output level), and then push [▢] to automatically adjust.

ADJUSTMENT	ADJUSTMENT ITEM		OPERATION	VALUE
SQUELCH	–	1	1) Set the power supply voltage to 7.4 V. 2) Connect an SSG to the antenna connector and set as; Modulation : 1 kHz	–
[BC BAND] **-1.010 MHz-**	[ASQ]	2	• Set the SSG as; Frequency : (Displayed on the function display) Level : –3 dBμ (–110 dBm)† Deviation : 30% (AM)	Push [▢]. (Automatic adjustment)
-87.5 MHz-	[WSQ]	3	• Set the SSG as; Frequency : (Displayed on the function display) Level : –3 dBμ (–110 dBm)† Deviation : 52.5 kHz	
[A BAND] **-VHF-** **FM mode**	[VSQ]	1	• Set the SSG as; Frequency : (Displayed on the function display) Level : OFF†	
FM-N mode		2		
-UHF- **FM mode**	[USQ]	3		
FM-N mode		4		
[AIR BAND]	[ASQ]	1	1) Set the power supply voltage to 7.4 V. 2) Connect an SSG to the antenna connector and set as; Frequency : (Displayed on the function display) Level : –26 dBμ (–133 dBm)† Modulation : 1 kHz Deviation : 30% (AM)	
[B BAND] **-VHF-**	[VSQ]	2	• Set the SSG as; Frequency : (Displayed on the function display) Level : –25 dBμ (–132 dBm)† Deviation : 3.5 kHz	
-UHF-	[USQ]	3		

†; This output level of a standard signal generator (SSG) is indicated as SSG's open circuit.

SECTION 6 PARTS LIST

[MAIN UNIT]

REF NO.	PARTS NO.	DESCRIPTION		M.	H/V LOCATION
IC1	1110007860	S.IC	S-80950CLPF-G7LTFG	B	29.9/23.1
IC2	1110007610	S.IC	TPA0211DGNR	B	89.2/30.7
IC3	1180004210	S.REG	XC6221A402NR-G	T	49.3/20.6
IC4	6910022360	S.DC	TPS62110RSAR	B	84.0/12.7
IC5	1110006380	S.IC	LM2904PWR	T	21.7/15.3
IC6	1130011671	S.IC	MB15E03SLPFV1-G-ER-6E1	T	53.4/33.3
IC8	1190003490	S.IC	BQ24113	B	61.1/43.0
IC11	1110007550	S.IC	R2A20178NP	B	74.3/27.4
IC12	1110002751	S.IC	TA75S01F(TE85RF)	T	14.7/42.8
IC13	1110007320	S.IC	NJM2591V-TE1-#ZZZB	B	67.4/33.7
IC14	1110006380	S.IC	LM2904PWR	T	15.7/36.6
IC15	1180003460	S.REG	NJM2831F05-TE1-#ZZZB	T	51.9/47.1
IC16	1110006490	S.IC	LMV321IDCKR	B	77.2/38.1
IC17	1180003920	S.REG	XC6222D421MR-G	T	88.8/32.0
IC18	1130009981	S.IC	TC7W53FK(TE85LF)	B	75.3/20.3
IC20	1110006490	S.IC	LMV321IDCKR	B	82.8/28.4
IC441	1110008020	S.IC	SI4730-D60-GMR <MAC>	B	83.1/35.7
IC450	1130011671	S.IC	MB15E03SLPFV1-G-ER-6E1	T	45.7/14.8
IC901	1110007320	S.IC	NJM2591V-TE1-#ZZZB	B	72.8/11.0
IC952	1130016460	S.IC	R2A20169SA	T	33.9/12.8
IC953	1130011760	S.IC	CD4094BPWR	B	69.1/22.0
IC955	1110006490	S.IC	LMV321IDCKR	B	77.2/35.4
Q1	1590004100	S.TRA	LDTC144TET1G <SLVJ>	T	31.7/25.4
Q2	1550000240	S.FET	TPCF8107(TE85LF)	T	24.9/21.7
Q3	1590004100	S.TRA	LDTC144TET1G <SLVJ>	T	33.6/22.9
Q8	1550000240	S.FET	TPCF8107(TE85LF)	T	23.1/25.0
Q10	1590004050	S.TRA	LDTA144EET1G <SLVJ>	T	66.6/41.4
Q11	1590004070	S.TRA	LDTC144EET1G <SLVJ>	T	68.9/41.0
Q12	1530003990	S.TRA	2SC4738-BL(TE85LF)	T	53.0/26.9
Q17	1510001100	S.TRA	2SA1832-GR(TE85RF)	T	24.2/12.5
Q19	1590004070	S.TRA	LDTC144EET1G <SLVJ>	T	27.4/12.0
Q20	1560001730	S.FET	RUE002N02 TL	B	86.2/28.9
Q26	1560000541	S.FET	2SK880-Y(T5RICOMF)	T	53.8/40.8
Q36	1590004300	S.TRA	DRA9114T0L	B	64.3/26.7
Q37	1510001100	S.TRA	2SA1832-GR(TE85RF)	T	37.8/23.5
Q38	1530003990	S.TRA	2SC4738-BL(TE85LF)	T	63.9/30.6
Q39	1530004320	S.TRA	MT3S19TU(TE85L)	B	18.7/40.4
Q40	1530003990	S.TRA	2SC4738-BL(TE85LF)	B	61.2/28.0
Q41	1560001710	S.FET	RFM01U7P(TE12LF)	B	10.0/38.3
Q43	1590004070	S.TRA	LDTC144EET1G <SLVJ>	B	19.1/28.7
Q44	1530002921	S.TRA	2SC4226-T1 Y25 (R25)	B	57.7/35.9
Q45	1560001720	S.FET	RFM12U7X(T2LICOMQ)	T	8.0/30.0
Q48	1530003260	S.TRA	2SC5006-T1	T	34.9/28.5
Q49	1530003990	S.TRA	2SC4738-BL(TE85LF)	B	53.1/28.4
Q50	1530003990	S.TRA	2SC4738-BL(TE85LF)	B	57.8/28.4
Q51	1530003990	S.TRA	2SC4738-BL(TE85LF)	T	28.4/28.6
Q451	1560000541	S.FET	2SK880-Y(T5RICOMF)	T	45.2/7.4
Q470	1590004610	S.TRA	DMA561050R	T	44.0/20.2
Q471	1590004610	S.TRA	DMA561050R	T	46.0/28.2
Q472	1590005110	S.FET	QS6J11TR	T	49.7/28.6
Q501	1590004330	S.TRA	DRC9114E0L	T	12.0/9.8
Q502	1590004330	S.TRA	DRC9114E0L	T	14.9/9.9
Q503	1590004510	S.TRA	DMA561040R	T	13.1/12.4
Q504	1590004150	S.TRA	DRC9114T0L	B	10.0/15.2
Q601	1580000830	S.FET	BB506CFS-TL-E	B	41.2/19.5
Q602	1580000830	S.FET	BB506CFS-TL-E	B	27.9/5.2
Q641	1580000830	S.FET	BB506CFS-TL-E	B	46.9/7.5
Q701	1580000830	S.FET	BB506CFS-TL-E	B	36.7/18.8
Q702	1580000830	S.FET	BB506CFS-TL-E	B	21.3/11.6
Q740	1580000830	S.FET	BB506CFS-TL-E	B	46.5/15.1
Q780	1530003260	S.TRA	2SC5006-T1	T	24.3/9.9
Q801	1580000830	S.FET	BB506CFS-TL-E	B	46.9/26.4
Q811	1580000830	S.FET	BB506CFS-TL-E	B	54.2/11.4
Q820	1580000830	S.FET	BB506CFS-TL-E	B	39.9/29.2
Q830	1580000830	S.FET	BB506CFS-TL-E	B	57.9/17.7
Q850	1590004610	S.TRA	DMA561050R	B	64.9/17.5
Q851	1590004610	S.TRA	DMA561050R	B	64.0/20.3
Q852	1590004610	S.TRA	DMA561050R	B	64.0/14.7
Q853	1510001100	S.TRA	2SA1832-GR(TE85RF)	T	83.4/20.6
Q854	1590004300	S.TRA	DRA9114T0L	T	21.0/8.2
Q900	1530003260	S.TRA	2SC5006-T1	T	60.7/10.5
Q901	1530002921	S.TRA	2SC4226-T1 Y25 (R25)	B	66.7/9.8
Q902	1590004300	S.TRA	DRA9114T0L	T	85.4/13.5
Q903	1590004590	S.TRA	DMC506010R	T	82.1/15.2
Q904	1590004590	S.TRA	DMC506010R	T	79.3/11.4
Q906	1560001730	S.FET	RUE002N02 TL	T	25.3/3.2
Q907	1560001730	S.FET	RUE002N02 TL	T	25.3/5.2
Q908	1530003990	S.TRA	2SC4738-BL(TE85LF)	T	17.8/10.0
D1	1750002170	S.DIO	DB2S31400L	T	29.6/21.3
D3	1750001810	S.DIO	L1SS400T1G <SLVJ>	T	62.7/42.2
D4	1750001690	S.DIO	RB050LA-40	T	65.7/44.2
D9	1730002890	S.ZEN	DZ2J033M0L	T	26.2/15.8
D14	1750001910	S.DIO	HVD144AKRF-E	T	39.0/31.1
D15	1750001910	S.DIO	HVD144AKRF-E	B	67.3/28.0
D16	1750001910	S.DIO	HVD144AKRF-E	B	68.3/28.0
D17	1750001810	S.DIO	L1SS400T1G <SLVJ>	T	35.6/19.4
D18	1750001910	S.DIO	HVD144AKRF-E	T	69.2/34.6
D19	1750001910	S.DIO	HVD144AKRF-E	T	70.2/34.6
D20	1750002290	S.DIO	RKP300KJ	T	23.9/31.0
D21	1750002290	S.DIO	RKP300KJ	T	22.4/34.8
D22	1750001820	S.DIO	LRB706F-40T1G <SLVJ>	B	60.3/36.0
D23	1750001820	S.DIO	LRB706F-40T1G <SLVJ>	B	55.0/35.9
D34	1750002020	S.DIO	DA2S10100L	B	55.7/27.3
D37	1790001830	S.VAR	AVR-M1005C270MTAAB	T	17.2/23.9

[MAIN UNIT]

REF NO.	PARTS NO.	DESCRIPTION		M.	H/V LOCATION
D501	1750000581	S.DIO	1SV307(TPH3F)	B	13.5/19.9
D502	1750002580	S.DIO	HVU187TRF-E	B	10.4/19.9
D503	1750001910	S.DIO	HVD144AKRF-E	T	5.9/22.1
D504	1750001910	S.DIO	HVD144AKRF-E	T	4.8/22.1
D505	1750001820	S.DIO	LRB706F-40T1G <SLVJ>	B	8.9/22.4
D506	1750001910	S.DIO	HVD144AKRF-E	B	11.0/23.4
D508	1750001910	S.DIO	HVD144AKRF-E	B	17.3/12.9
D509	1750001820	S.DIO	LRB706F-40T1G <SLVJ>	B	6.3/21.5
D510	1750001910	S.DIO	HVD144AKRF-E	B	17.3/11.8
D511	1750002580	S.DIO	HVU187TRF-E	B	10.0/13.2
D512	1750001820	S.DIO	LRB706F-40T1G <SLVJ>	B	2.0/18.8
D513	1750001820	S.DIO	LRB706F-40T1G <SLVJ>	B	5.6/19.0
D602	1750000771	S.VAR	HVC376BTRF-E	B	49.7/22.9
D603	1750000771	S.VAR	HVC376BTRF-E	B	46.0/22.0
D604	1750002020	S.DIO	DA2S10100L	B	40.4/15.0
D605	1750000721	S.VAR	HVC375BTRF-E	B	41.9/11.3
D606	1750000721	S.VAR	HVC375BTRF-E	B	37.5/11.3
D642	1750000771	S.VAR	HVC376BTRF-E	B	53.0/7.9
D643	1750000771	S.VAR	HVC376BTRF-E	B	50.1/7.8
D644	1750002020	S.DIO	DA2S10100L	B	46.6/12.1
D645	1750000721	S.VAR	HVC375BTRF-E	B	42.8/5.6
D646	1750000721	S.VAR	HVC375BTRF-E	B	39.6/5.6
D702	1750000771	S.VAR	HVC376BTRF-E	B	36.7/27.2
D703	1750000771	S.VAR	HVC376BTRF-E	B	36.6/24.3
D704	1750002020	S.DIO	DA2S10100L	B	36.2/13.9
D705	1750000771	S.VAR	HVC376BTRF-E	B	32.3/12.2
D741	1750000771	S.VAR	HVC376BTRF-E	B	52.8/20.2
D742	1750000771	S.VAR	HVC376BTRF-E	B	50.0/18.5
D743	1750002020	S.DIO	DA2S10100L	B	44.8/12.5
D744	1750000771	S.VAR	HVC376BTRF-E	B	35.8/9.3
D745	1750001910	S.DIO	HVD144AKRF-E	T	28.8/9.0
D781	1750001910	S.DIO	HVD144AKRF-E	B	15.7/21.2
D782	1750001910	S.DIO	HVD144AKRF-E	T	18.2/22.4
D783	1750001910	S.DIO	HVD144AKRF-E	T	31.2/34.6
D801	1750001910	S.DIO	HVD144AKRF-E	B	43.9/32.7
D802	1750001910	S.DIO	HVD144AKRF-E	T	43.4/28.3
D811	1750001910	S.DIO	HVD144AKRF-E	B	57.9/15.5
D812	1750001910	S.DIO	HVD144AKRF-E	T	56.2/18.2
D820	1750001910	S.DIO	HVD144AKRF-E	B	41.1/35.1
D821	1750001910	S.DIO	HVD144AKRF-E	T	42.3/28.3
D830	1750001910	S.DIO	HVD144AKRF-E	B	59.7/16.1
D831	1750001910	S.DIO	HVD144AKRF-E	T	56.9/19.8
D880	1750001820	S.DIO	LRB706F-40T1G <SLVJ>	B	64.9/5.5
D901	1750002020	S.DIO	DA2S10100L	B	66.8/5.7
D903	1750001910	S.DIO	HVD144AKRF-E	B	12.1/23.4
D904	1750001820	S.DIO	LRB706F-40T1G <SLVJ>	T	32.3/6.0
D905	1750001820	S.DIO	LRB706F-40T1G <SLVJ>	T	31.9/1.9
D906	1790001950	S.VAR	VC060318A400RP	B	65.7/44.9
D908	1750001910	S.DIO	HVD144AKRF-E	T	29.0/6.7
D909	1790001950	S.VAR	VC060318A400RP	B	49.4/44.4
FI1	2020002180	S.CER	CFWKA450KHFA-R0	T	69.0/25.7
FI2	2020002480	S.CER	LTWC450E1 <JJE>	T	78.0/25.7
FI3	2030000860	S.MON	MFT46.3M 46.350 MHz (FL-439)	B	49.5/33.7
FI880	2030000720	S.MON	MFT61.6M 61.650 MHz (FL-429)	B	59.9/8.8
FI900	2020002480	S.CER	LTWC450E1 <JJE>	T	71.6/15.2
X1	6050012830	S.XTA	CR-875 TTS14VSB-A3 15.3 MHz	T	63.0/16.4
X2	6070000310	S.DIS	JTBM450CX70 <JJE>	T	64.8/35.0
X900	6070000310	S.DIS	JTBM450CX70 <JJE>	T	69.0/7.5
L1	6200014270	S.COI	LQM2HPN2R2MJ0L	B	80.3/10.3
L2	6200014470	S.COI	LQH44PN100MP0L	B	87.3/18.3
L3	6200014270	S.COI	LQM2HPN2R2MJ0L	B	83.2/21.2
L6	6200014470	S.COI	LQH44PN100MP0L	B	54.4/43.2
L11	6200003960	S.COI	MLF1608A 1R0K-T	T	63.5/28.2
L12	6200003540	S.COI	MLF1608D R22K-T	T	61.6/31.1
L13	6200004480	S.COI	MLF1608D R82K-T	T	60.5/36.6
L14	6200011650	S.COI	LQW18AN68NG00D	B	16.3/39.8
L17	6200007740	S.COI	LQW2BHN47NJ03L	B	14.4/35.8
L19	6200005140	S.COI	MLF1608D R33K-T	B	59.3/33.9
L21	6200012800	S.COI	0.40-1.5-5TL 20N <COMO>	T	13.5/26.3
L41	6200006991	S.COI	ELJRE 56NGFA	T	33.1/28.5
L42	6200013860	S.COI	MLK1005S12NJT	T	10.1/34.5
L43	6200013850	S.COI	MLK1005S15NJT	T	12.5/33.6
L44	6200013970	S.COI	MLK1005S1N5ST	T	9.2/36.3
L45	6200013840	S.COI	MLK1005S18NJT	B	12.2/40.9
L402	6200006970	S.COI	MLF1608A 3R9K-T	T	16.4/12.6
L403	6200006970	S.COI	MLF1608A 3R9K-T	T	15.4/16.0
L501	6200013010	S.COI	0.30-0.9-5TL 10.3N <COMO>	T	4.1/24.9
L502	6200014200	S.COI	0.40-0.8-2TL 2.5J <COMO>	T	13.9/23.6
L503	6200013090	S.COI	0.26-1.1-5TR 16N <COMO>	T	14.3/21.3
L504	6200009250	S.COI	LQW18ANR22G00D (LQW1608AR22G00)	T	13.5/18.8
L505	6200004480	S.COI	MLF1608D R82K-T	T	7.8/22.7
L506	6200010910	S.COI	LQW18AN56NG00D	T	7.8/21.5
L507	6200012540	S.COI	0.30-1.2-5TR 16.1N <COMO>	B	15.4/16.7
L508	6200009070	S.COI	LQW18AN18NG00D (LQW1608A18NG00)	B	17.9/16.7
L511	6200012680	S.COI	0.30-1.3-5TL 20N <COMO>	B	14.2/14.1
L512	6200012980	S.COI	0.40-1.4-5TR 18.3N <COMO>	B	14.1/9.5
L513	6200013020	S.COI	0.25-1.9-7TL 61N <COMO>	T	4.6/19.1
L514	6200012730	S.COI	0.26-0.9-6TR 15.1N <COMO>	B	11.1/9.8
L515	6200012510	S.COI	0.25-1.9-8TL 72.0N <COMO>	T	8.9/18.0
L516	6200012910	S.COI	0.35-1.6-8TL 45.5N <COMO>	T	9.9/14.2

Eqv.= This component is equivalent to the REF No. component listed above, and may be substituted on parts orders and repairs.

M.=Mounted side (T: Mounted on the Top side, B: Mounted on the Bottom side)
S.=Surface mount

[MAIN UNIT]

REF NO.	PARTS NO.	DESCRIPTION	M.	H/V LOCATION
L602	6200010700	S.COI LQW18AN12NG00D	B	50.9/22.9
L603	6200009070	S.COI LQW18AN18NG00D (LQW1608A18NG00)	B	44.8/21.9
L604	6200011580	S.COI LQW18AN33NG00D	B	39.7/21.5
L605	6200011590	S.COI LQW18AN39NG00D	B	41.1/13.1
L606	6200011590	S.COI LQW18AN39NG00D	B	38.0/13.2
L607	6200011580	S.COI LQW18AN33NG00D	B	29.9/7.0
L608	6200011580	S.COI LQW18AN33NG00D	B	25.2/5.8
L610	6200011590	S.COI LQW18AN39NG00D	B	21.6/4.9
L612	6200011730	S.COI LQW18AN10NG00D	B	19.7/6.9
L641	6200010700	S.COI LQW18AN12NG00D	B	54.3/8.1
L642	6200009070	S.COI LQW18AN18NG00D (LQW1608A18NG00)	B	48.8/5.8
L643	6200011580	S.COI LQW18AN33NG00D	B	49.1/10.1
L644	6200011590	S.COI LQW18AN39NG00D	B	41.3/7.4
L645	6200011590	S.COI LQW18AN39NG00D	B	38.1/7.3
L701	6200011770	S.COI LQW18ANR10G00D	B	36.1/28.4
L702	6200011770	S.COI LQW18ANR10G00D	B	36.8/21.2
L703	6200011670	S.COI LQW18AN82NG00D	B	34.3/13.1
L704	6200011860	S.COI LQW18ANR47G00D	B	23.3/10.0
L705	6200011660	S.COI LQW18ANR15G00D	B	19.2/22.3
L706	6200011660	S.COI LQW18ANR15G00D	B	18.7/20.5
L740	6200011770	S.COI LQW18ANR10G00D	B	54.0/18.6
L741	6200011770	S.COI LQW18ANR10G00D	B	47.3/17.8
L742	6200011670	S.COI LQW18AN82NG00D	B	41.7/9.6
L781	6200011650	S.COI LQW18AN68NG00D	T	19.0/16.8
L782	6200011590	S.COI LQW18AN39NG00D	T	18.3/18.6
L801	6200011220	S.COI C2012C-R47J-A	B	45.0/29.8
L802	6200009070	S.COI LQW18AN18NG00D (LQW1608A18NG00)	B	44.3/25.6
L803	6200013770	S.COI MLK1005S68NJT	B	45.1/24.2
L811	6200010340	S.COI C2012C-R33G-A	B	56.5/13.7
L813	6200013780	S.COI MLK1005S56NJT	B	52.3/15.0
L820	6200011220	S.COI C2012C-R47J-A	B	40.5/33.5
L821	6200009290	S.COI LQW18AN47NG00D (LQW1608A47NG00)	B	38.9/25.1
L830	6200010340	S.COI C2012C-R33G-A	B	60.4/19.5
L831	6200011660	S.COI LQW18ANR15G00D	B	55.6/22.5
L901	6200004790	S.COI MLF1608D R47K-T	T	62.4/9.2
L902	6200004790	S.COI MLF1608D R47K-T	T	64.2/6.6
L903	6200005140	S.COI MLF1608D R33K-T	B	68.7/8.1
L904	6200011660	S.COI LQW18ANR15G00D	B	19.3/26.1
L905	6200009531	S.COI ELJRE R15GFA	T	27.2/7.3
L906	6200009070	S.COI LQW18AN18NG00D (LQW1608A18NG00)	B	53.3/16.4
L907	6200010850	S.COI LQW18AN22NG00D (LQW1608A22NG00)	B	44.2/6.9
L908	6200010850	S.COI LQW18AN22NG00D (LQW1608A22NG00)	B	42.2/16.9
L909	6200011770	S.COI LQW18ANR10G00D	B	18.3/24.2
L910	6200014770	S.COI MLF2012C101K-T	T	20.1/5.5
L911	6200013530	S.COI MLF2012E 100K-T	T	18.8/2.4
L912	6200014770	S.COI MLF2012C101K-T	T	23.4/1.6
L913	6200013750	S.COI MLK1005SR10JT	T	18.8/13.5
R1	7030011870	S.RES ERJ2BSFR18X (0.18)	T	31.8/19.8
R4	7030011910	S.RES ERJ2GEJ 106 X (10M)	T	28.6/26.8
R5	7030012250	S.RES ERJ2RKD 1004X (1M)	T	32.1/18.6
R6	7030008310	S.RES ERJ2GEJ 564 X (560K)	T	33.0/18.6
R7	7030003860	S.RES ERJ3GE JPW V	B	37.0/39.0
R8	7030008270	S.RES RR0510P-104-D (100K)	B	13.0/6.8
R9	7030011910	S.RES ERJ2GEJ 106 X (10M)	T	30.2/26.9
R10	7030005000	S.RES ERJ2GEJ 471 X (470)	B	25.3/40.6
R11	7030007320	S.RES ERJ2GEJ 225 X (2.2M)	T	31.7/21.3
R12	7030011910	S.RES ERJ2GEJ 106 X (10M)	T	31.7/22.3
R13	7030011910	S.RES ERJ2GEJ 106 X (10M)	T	32.1/23.6
R14	7030003860	S.RES ERJ3GE JPW V	T	88.0/24.5
R17	7030005830	S.RES RR0510P-223-D (22K)	B	65.2/41.0
R18	7030007340	S.RES ERJ2GEJ 153 X (15K)	B	64.0/40.5
R19	7030005820	S.RES RR0510P-103-D (10K)	T	33.5/21.3
R21	7030005290	S.RES ERJ2GEJ 682 X (6.8K)	B	57.4/44.2
R22	7030005240	S.RES ERJ2GEJ 473 X (47K)	B	57.4/41.4
R25	7030010040	S.RES ERJ2GEJ-JPW	B	87.6/26.6
R26	7030008270	S.RES RR0510P-104-D (100K)	B	57.4/42.3
R28	7030011890	S.RES ERJ2BSFR10X (0.1)	B	50.9/40.5
R30	7030008270	S.RES RR0510P-104-D (100K)	B	89.1/27.2
R37	7030008310	S.RES ERJ2GEJ 564 X (560K)	T	64.3/13.1
R41	7030009280	S.RES ERJ2GEJ 391 X	T	54.8/28.4
R43	7030009190	S.RES RR0510P-332-D (3.3K)	B	86.9/32.4
R44	7030011870	S.RES ERJ2BSFR18X (0.18)	T	20.9/26.1
R45	7030011870	S.RES ERJ2BSFR18X (0.18)	T	20.9/25.2
R46	7030011870	S.RES ERJ2BSFR18X (0.18)	T	20.9/24.3
R47	7030005820	S.RES RR0510P-103-D (10K)	T	64.2/20.8
R48	7030012270	S.RES ERJ2RKD 1203X (120K)	T	20.4/22.9
R49	7030012250	S.RES ERJ2RKD 1004X (1M)	B	81.2/14.1
R53	7030012260	S.RES ERJ2RKD 4703X (470K)	T	22.5/19.8
R54	7030012250	S.RES ERJ2RKD 1004X (1M)	T	22.5/22.5
R55	7030005120	S.RES ERJ2GEJ 102 X (1K)	T	54.6/30.0
R57	7030010020	S.RES ERJ2RKF 1503X (150K)	B	80.6/20.1
R59	7030005820	S.RES RR0510P-103-D (10K)	T	24.0/16.5
R60	7030007320	S.RES ERJ2GEJ 225 X (2.2M)	T	48.1/31.9
R61	7030012270	S.RES ERJ2RKD 1203X (120K)	T	21.3/22.9
R62	7030008270	S.RES RR0510P-104-D (100K)	T	58.3/34.5
R63	7030010040	S.RES ERJ2GEJ-JPW	B	81.5/21.7
R64	7030012260	S.RES ERJ2RKD 4703X (470K)	B	80.6/21.7
R65	7030012250	S.RES ERJ2RKD 1004X (1M)	T	20.9/19.8
R67	7030005810	S.RES RR0510P-152-D (1.5K)	T	48.0/37.6
R69	7030012260	S.RES ERJ2RKD 4703X (470K)	T	20.9/21.6
R71	7030007570	S.RES ERJ2GEJ 122 X (1.2K)	T	47.6/38.8
R76	7030005240	S.RES ERJ2GEJ 473 X (47K)	T	25.9/11.0
R79	7030005240	S.RES ERJ2GEJ 473 X (47K)	T	25.8/12.5
R82	7030005000	S.RES ERJ2GEJ 471 X (470)	B	32.8/37.1
R90	7030007570	S.RES ERJ2GEJ 122 X (1.2K)	T	47.1/40.0
R93	7030007570	S.RES ERJ2GEJ 122 X (1.2K)	T	45.8/37.6

[MAIN UNIT]

REF NO.	PARTS NO.	DESCRIPTION	M.	H/V LOCATION
R103	7030005000	S.RES ERJ2GEJ 471 X (470)	T	53.5/38.5
R110	7030005290	S.RES ERJ2GEJ 682 X (6.8K)	T	56.1/40.2
R112	7030008270	S.RES RR0510P-104-D (100K)	T	51.4/41.2
R113	7030005210	S.RES ERJ2GEJ 822 X (8.2K)	T	54.7/39.0
R121	7030010040	S.RES ERJ2GEJ-JPW	T	28.4/30.2
R122	7030010040	S.RES ERJ2GEJ-JPW	T	27.0/29.7
R123	7030005290	S.RES ERJ2GEJ 682 X (6.8K)	T	27.0/28.1
R142	7030008270	S.RES RR0510P-104-D (100K)	B	74.6/23.8
R143	7030009190	S.RES RR0510P-332-D (3.3K)	B	78.2/28.2
R144	7030009190	S.RES RR0510P-332-D (3.3K)	B	78.5/29.3
R145	7030009190	S.RES RR0510P-332-D (3.3K)	B	78.2/26.7
R158	7030011000	S.RES RR0510P-392-D (3.9K)	T	37.6/28.5
R159	7030005810	S.RES RR0510P-152-D (1.5K)	T	38.9/33.0
R160	7030008010	S.RES ERJ2GEJ 123 X (12K)	B	67.4/29.9
R161	7030005820	S.RES RR0510P-103-D (10K)	B	66.0/27.3
R162	7030005820	S.RES RR0510P-103-D (10K)	B	68.3/25.9
R163	7030005120	S.RES ERJ2GEJ 102 X (1K)	T	37.3/19.9
R164	7030005240	S.RES ERJ2GEJ 473 X (47K)	T	37.4/21.5
R165	7030007060	S.RES ERJ2GEJ 684X (680K)	T	62.1/29.2
R166	7030004980	S.RES ERJ2GEJ 101 X (100)	T	60.9/29.7
R167	7030005820	S.RES RR0510P-103-D (10K)	T	69.6/33.1
R168	7030005820	S.RES RR0510P-103-D (10K)	T	71.2/33.1
R169	7030005220	S.RES ERJ2GEJ 223 X (22K)	T	15.4/45.1
R170	7030008010	S.RES ERJ2GEJ 123 X (12K)	B	69.0/37.0
R171	7030005060	S.RES ERJ2GEJ 333 X (33K)	T	17.2/43.2
R172	7030005100	S.RES ERJ2GEJ 154 X (150K)	B	69.7/30.4
R173	7030005120	S.RES ERJ2GEJ 102 X (1K)	B	71.1/29.8
R174	7030005120	S.RES ERJ2GEJ 102 X (1K)	T	25.2/29.0
R176	7030010130	S.RES ERJ2GEJ 6R8 X (6.8)	B	18.4/38.4
R177	7030010010	S.RES ERJ2RKF 334 X (330K)	T	12.5/44.7
R178	7030012250	S.RES ERJ2RKD 1004X (1M)	T	12.5/43.0
R179	7030005100	S.RES ERJ2GEJ 154 X (150K)	B	70.2/27.6
R180	7030005120	S.RES ERJ2GEJ 102 X (1K)	T	23.1/32.7
R181	7030005820	S.RES RR0510P-103-D (10K)	T	22.2/30.0
R182	7030005810	S.RES RR0510P-152-D (1.5K)	B	72.5/35.4
R183	7030005120	S.RES ERJ2GEJ 102 X (1K)	T	22.1/36.5
R184	7030005810	S.RES RR0510P-152-D (1.5K)	T	22.2/31.8
R185	7030009140	S.RES ERJ2GEJ 272 X (2.7K)	B	21.1/40.2
R186	7030005210	S.RES ERJ2GEJ 822 X (8.2K)	B	21.1/38.4
R187	7030004980	S.RES ERJ2GEJ 101 X (100)	T	21.0/32.1
R188	7030010010	S.RES ERJ2RKF 334 X (330K)	T	10.6/39.5
R189	7030005220	S.RES ERJ2GEJ 223 X (22K)	T	14.2/39.5
R191	7030012250	S.RES ERJ2RKD 1004X (1M)	T	10.5/37.9
R192	7030009280	S.RES ERJ2GEJ 391 X	B	12.8/42.8
R193	7030008270	S.RES RR0510P-104-D (100K)	B	62.6/33.7
R194	7030005060	S.RES ERJ2GEJ 333 X (33K)	T	12.4/39.5
R195	7030008400	S.RES ERJ2GEJ 182 X (1.8K)	B	65.3/29.8
R196	7030009190	S.RES RR0510P-332-D (3.3K)	B	62.8/29.1
R197	7030007250	S.RES ERJ2GEJ 220 X (22)	B	62.2/31.6
R198	7030008400	S.RES ERJ2GEJ 182 X (1.8K)	B	63.1/31.6
R199	7030005240	S.RES ERJ2GEJ 473 X (47K)	B	59.2/27.0
R200	7030004990	S.RES ERJ2GEJ 221 X (220)	B	13.7/37.3
R201	7030004970	S.RES ERJ2GEJ 470 X (47)	B	12.2/41.8
R202	7030005240	S.RES ERJ2GEJ 473 X (47K)	B	13.3/44.2
R203	7030008310	S.RES ERJ2GEJ 564 X (560K)	T	20.5/36.9
R204	7030005240	S.RES ERJ2GEJ 473 X (47K)	B	66.0/26.4
R205	7030009190	S.RES RR0510P-332-D (3.3K)	T	9.6/37.9
R206	7030007340	S.RES ERJ2GEJ 153 X (15K)	T	19.3/34.0
R207	7030007340	S.RES ERJ2GEJ 153 X (15K)	B	18.5/31.7
R209	7030005590	S.RES ERJ2GEJ 680 X (68)	B	62.5/36.8
R210	7030010040	S.RES ERJ2GEJ-JPW	T	9.2/35.4
R211	7030009160	S.RES ERJ2GEJ 181 X (180)	B	57.8/31.5
R212	7030005000	S.RES ERJ2GEJ 471 X (470)	B	60.7/33.0
R213	7030004980	S.RES ERJ2GEJ 101 X (100)	T	7.9/36.9
R214	7030005720	S.RES ERJ2GEJ 563 X (56K)	B	56.0/31.5
R215	7030004990	S.RES ERJ2GEJ 221 X (220)	T	20.1/32.1
R216	7030005820	S.RES RR0510P-103-D (10K)	T	18.4/34.0
R217	7030010430	S.RES ERJ2GEJ 120 X (12)	T	7.9/34.3
R218	7030007340	S.RES ERJ2GEJ 153 X (15K)	T	3.8/33.7
R222	7030004980	S.RES ERJ2GEJ 101 X (100)	B	44.1/33.7
R253	7030005600	S.RES ERJ2GEJ 273 X (27K)	T	35.7/26.7
R254	7030004970	S.RES ERJ2GEJ 470 X (47)	T	37.0/26.3
R255	7030007340	S.RES ERJ2GEJ 153 X (15K)	B	60.0/29.5
R256	7030005110	S.RES ERJ2GEJ 224 X (220K)	B	56.4/30.2
R257	7030005060	S.RES ERJ2GEJ 333 X (33K)	B	55.5/30.2
R258	7030008270	S.RES RR0510P-104-D (100K)	B	54.7/28.4
R259	7030005010	S.RES ERJ2GEJ 681 X (680)	B	53.8/26.5
R260	7030007340	S.RES ERJ2GEJ 153 X (15K)	B	56.1/33.0
R261	7030007340	S.RES ERJ2GEJ 153 X (15K)	B	57.3/30.2
R262	7030005010	S.RES ERJ2GEJ 681 X (680)	B	57.5/26.9
R263	7030011910	S.RES ERJ2GEJ 106 X (10M)	B	59.2/30.8
R268	7030007280	S.RES ERJ2GEJ 331 X (330)	B	54.4/34.1
R273	7030010010	S.RES ERJ2RKF 334 X (330K)	B	75.8/39.8
R274	7030010010	S.RES ERJ2RKF 334 X (330K)	B	77.2/40.2
R275	7030005240	S.RES ERJ2GEJ 473 X (47K)	T	20.5/34.2
R276	7030009190	S.RES RR0510P-332-D (3.3K)	B	83.3/30.2
R277	7030008270	S.RES RR0510P-104-D (100K)	B	82.3/26.6
R278	7030005720	S.RES ERJ2GEJ 563 X (56K)	B	80.9/26.9
R280	7030005810	S.RES RR0510P-152-D (1.5K)	B	84.5/30.7
R281	7030007280	S.RES ERJ2GEJ 331 X (330)	B	85.4/30.7
R401	7030005290	S.RES ERJ2GEJ 682 X (6.8K)	T	29.0/4.2
R403	7030005240	S.RES ERJ2GEJ 473 X (47K)	T	26.9/4.7
R404	7030005240	S.RES ERJ2GEJ 473 X (47K)	T	26.9/3.1
R441	7030008270	S.RES RR0510P-104-D (100K)	B	38.6/43.9
R442	7030005240	S.RES ERJ2GEJ 473 X (47K)	B	80.0/35.0
R444	7030005290	S.RES ERJ2GEJ 682 X (6.8K)	T	29.0/5.1
R450	7030005120	S.RES ERJ2GEJ 102 X (1K)	T	47.7/18.3
R451	7030007320	S.RES ERJ2GEJ 225 X (2.2M)	T	51.0/16.2
R452	7030005810	S.RES RR0510P-152-D (1.5K)	T	51.0/10.7
R454	7030007570	S.RES ERJ2GEJ 122 X (1.2K)	T	51.4/9.4
R455	7030007570	S.RES ERJ2GEJ 122 X (1.2K)	T	51.8/8.1
R457	7030007570	S.RES ERJ2GEJ 122 X (1.2K)	T	53.2/10.5
R458	7030008270	S.RES RR0510P-104-D (100K)	T	47.6/6.9
R459	7030005000	S.RES ERJ2GEJ 471 X (470)	T	45.6/9.6
R460	7030005210	S.RES ERJ2GEJ 822 X (8.2K)	T	44.4/9.1

Eqv.= This component is equivalent to the REF No. component listed above, and may be substituted on parts orders and repairs.

M.=Mounted side (T: Mounted on the Top side, B: Mounted on the Bottom side)
S.=Surface mount

[MAIN UNIT]

REF NO.	PARTS NO.	DESCRIPTION	M.	H/V LOCATION
R461	7030005290	S.RES ERJ2GEJ 682 X (6.8K)	T	43.0/7.9
R462	7030010040	S.RES ERJ2GEJ-JPW	B	79.1/34.6
R465	7030010040	S.RES ERJ2GEJ-JPW	B	80.1/29.2
R466	7030010040	S.RES ERJ2GEJ-JPW	T	87.8/36.5
R472	7030010040	S.RES ERJ2GEJ-JPW	T	45.7/2.5
R473	7030010040	S.RES ERJ2GEJ-JPW	T	51.4/2.5
R501	7510001770	S.THE NTCG10 4LH 473JT	B	8.1/24.3
R502	7030005120	S.RES ERJ2GEJ 102 X (1K)	T	14.1/15.5
R503	7030005820	S.RES RR0510P-103-D (10K)	B	9.7/24.3
R504	7030010040	S.RES ERJ2GEJ-JPW	T	12.9/16.4
R505	7030005120	S.RES ERJ2GEJ 102 X (1K)	T	11.6/17.3
R506	7030004980	S.RES ERJ2GEJ 101 X (100)	T	11.6/19.1
R507	7030007270	S.RES ERJ2GEJ 151 X (150)	B	10.3/16.7
R508	7030005060	S.RES ERJ2GEJ 333 X (33K)	B	3.9/24.3
R510	7030003340	S.RES ERJ3GEYJ 151 V (150)	B	18.6/14.7
R511	7030005240	S.RES ERJ2GEJ 473 X (47K)	B	3.9/22.5
R512	7030007270	S.RES ERJ2GEJ 151 X (150)	B	8.3/14.6
R513	7030005240	S.RES ERJ2GEJ 473 X (47K)	B	2.5/22.0
R514	7030005820	S.RES RR0510P-103-D (10K)	B	2.1/23.4
R515	7030005080	S.RES ERJ2GEJ 823 X (82K)	B	3.9/23.4
R516	7030005080	S.RES ERJ2GEJ 823 X (82K)	B	7.0/11.4
R602	7030005530	S.RES ERJ2GEJ 100 X (10)	B	39.3/16.4
R603	7030005240	S.RES ERJ2GEJ 473 X (47K)	B	48.6/21.5
R604	7030005240	S.RES ERJ2GEJ 473 X (47K)	B	47.3/21.0
R605	7030010040	S.RES ERJ2GEJ-JPW	B	43.0/20.1
R606	7030006010	S.RES RR0510P-472-D (4.7K)	B	39.2/23.4
R607	7030005220	S.RES ERJ2GEJ 223 X (22K)	B	41.1/16.4
R608	7030005220	S.RES ERJ2GEJ 223 X (22K)	B	40.2/16.4
R610	7030008300	S.RES ERJ2GEJ 184 X (180K)	B	40.8/17.7
R612	7030005240	S.RES ERJ2GEJ 473 X (47K)	B	40.0/12.7
R613	7030005240	S.RES ERJ2GEJ 473 X (47K)	B	39.1/12.7
R614	7030004980	S.RES ERJ2GEJ 101 X (100)	B	33.7/9.8
R615	7030004980	S.RES ERJ2GEJ 101 X (100)	B	33.9/7.2
R616	7030010040	S.RES ERJ2GEJ-JPW	B	31.8/7.3
R617	7030005530	S.RES ERJ2GEJ 100 X (10)	B	32.7/6.7
R618	7030010040	S.RES ERJ2GEJ-JPW	B	31.6/4.9
R619	7030005240	S.RES ERJ2GEJ 473 X (47K)	B	27.0/7.2
R621	7030005310	S.RES ERJ2GEJ 124 X (120K)	B	25.2/7.2
R642	7030005530	S.RES ERJ2GEJ 100 X (10)	B	50.2/11.7
R643	7030005240	S.RES ERJ2GEJ 473 X (47K)	B	51.7/5.8
R644	7030005240	S.RES ERJ2GEJ 473 X (47K)	B	50.8/5.8
R645	7030010040	S.RES ERJ2GEJ-JPW	B	46.6/5.7
R646	7030006010	S.RES RR0510P-472-D (4.7K)	B	51.1/10.1
R647	7030005220	S.RES ERJ2GEJ 223 X (22K)	B	47.8/11.0
R648	7030005220	S.RES ERJ2GEJ 223 X (22K)	B	46.2/11.0
R650	7030008300	S.RES ERJ2GEJ 184 X (180K)	B	45.0/8.2
R652	7030005240	S.RES ERJ2GEJ 473 X (47K)	B	40.2/6.9
R653	7030005240	S.RES ERJ2GEJ 473 X (47K)	B	39.3/6.9
R702	7030005530	S.RES ERJ2GEJ 100 X (10)	B	35.4/22.3
R703	7030005240	S.RES ERJ2GEJ 473 X (47K)	B	35.4/26.2
R704	7030005240	S.RES ERJ2GEJ 473 X (47K)	B	35.4/25.3
R705	7030008270	S.RES RR0510P-104-D (100K)	B	35.4/23.2
R707	7030005120	S.RES ERJ2GEJ 102 X (1K)	B	37.1/22.3
R708	7030005220	S.RES ERJ2GEJ 223 X (22K)	B	34.5/16.5
R709	7030005220	S.RES ERJ2GEJ 223 X (22K)	B	34.6/17.8
R711	7030008300	S.RES ERJ2GEJ 184 X (180K)	B	35.7/16.8
R713	7030005240	S.RES ERJ2GEJ 473 X (47K)	B	32.6/11.1
R714	7030007280	S.RES ERJ2GEJ 331 X (330)	B	28.1/10.8
R715	7030005530	S.RES ERJ2GEJ 100 X (10)	B	25.2/9.5
R716	7030010040	S.RES ERJ2GEJ-JPW	B	26.5/10.8
R717	7030010040	S.RES ERJ2GEJ-JPW	B	21.3/9.4
R718	7030005810	S.RES RR0510P-152-D (1.5K)	B	24.3/9.5
R719	7030005240	S.RES ERJ2GEJ 473 X (47K)	B	19.7/19.1
R721	7030005310	S.RES ERJ2GEJ 124 X (120K)	B	18.8/19.1
R725	7030005530	S.RES ERJ2GEJ 100 X (10)	B	37.4/16.2
R741	7030005530	S.RES ERJ2GEJ 100 X (10)	B	47.3/19.6
R742	7030005240	S.RES ERJ2GEJ 473 X (47K)	B	52.0/18.2
R743	7030005240	S.RES ERJ2GEJ 473 X (47K)	B	51.1/18.2
R744	7030008270	S.RES RR0510P-104-D (100K)	B	49.2/16.2
R745	7030005530	S.RES ERJ2GEJ 100 X (10)	B	48.8/15.0
R746	7030005120	S.RES ERJ2GEJ 102 X (1K)	B	46.3/18.0
R747	7030005220	S.RES ERJ2GEJ 223 X (22K)	B	43.8/17.2
R748	7030005220	S.RES ERJ2GEJ 223 X (22K)	B	44.2/16.0
R750	7030008300	S.RES ERJ2GEJ 184 X (180K)	B	44.2/15.1
R752	7030005240	S.RES ERJ2GEJ 473 X (47K)	B	37.2/9.4
R753	7030007280	S.RES ERJ2GEJ 331 X (330)	B	28.1/9.9
R754	7030005820	S.RES RR0510P-103-D (10K)	T	29.1/9.9
R770	7030010040	S.RES ERJ2GEJ-JPW	T	17.3/21.0
R780	7030004980	S.RES ERJ2GEJ 101 X (100)	T	21.5/9.9
R781	7030005060	S.RES ERJ2GEJ 333 X (33K)	T	22.7/9.9
R783	7030007290	S.RES ERJ2GEJ 222 X (2.2K)	T	18.5/20.6
R784	7030009190	S.RES RR0510P-332-D (3.3K)	T	16.4/20.9
R785	7030007290	S.RES ERJ2GEJ 222 X (2.2K)	B	16.6/20.9
R787	7030005240	S.RES ERJ2GEJ 473 X (47K)	T	32.6/33.7
R801	7030007250	S.RES ERJ2GEJ 220 X (22)	B	47.5/30.1
R802	7030008370	S.RES ERJ2GEJ 561 X (560)	B	44.3/31.5
R803	7030005080	S.RES ERJ2GEJ 823 X (82K)	B	47.3/24.6
R804	7030008270	S.RES RR0510P-104-D (100K)	B	48.6/25.1
R805	7030008270	S.RES RR0510P-104-D (100K)	B	43.9/24.2
R806	7030005120	S.RES ERJ2GEJ 102 X (1K)	B	47.3/23.7
R811	7030007250	S.RES ERJ2GEJ 220 X (22)	B	55.9/15.3
R812	7030008280	S.RES ERJ2GEJ 271 X (270)	B	56.4/11.2
R813	7030005080	S.RES ERJ2GEJ 823 X (82K)	B	51.4/13.4
R814	7030008270	S.RES RR0510P-104-D (100K)	B	52.3/11.7
R815	7030008270	S.RES RR0510P-104-D (100K)	B	51.4/11.7
R816	7030005120	S.RES ERJ2GEJ 102 X (1K)	B	52.3/13.4
R820	7030005210	S.RES ERJ2GEJ 822 X (8.2K)	B	43.2/35.5
R821	7030007250	S.RES ERJ2GEJ 220 X (22)	B	42.4/31.4
R822	7030008370	S.RES ERJ2GEJ 561 X (560)	B	39.6/31.0
R823	7030005080	S.RES ERJ2GEJ 823 X (82K)	B	40.6/27.3
R824	7030008270	S.RES RR0510P-104-D (100K)	B	42.2/28.2
R825	7030008270	S.RES RR0510P-104-D (100K)	B	38.2/28.8
R826	7030009140	S.RES ERJ2GEJ 272 X (2.7K)	B	42.2/27.3
R827	7030006010	S.RES RR0510P-472-D (4.7K)	T	43.8/30.0
R830	7030005210	S.RES ERJ2GEJ 822 X (8.2K)	B	60.6/14.5

[MAIN UNIT]

REF NO.	PARTS NO.	DESCRIPTION	M.	H/V LOCATION
R831	7030007250	S.RES ERJ2GEJ 220 X (22)	B	58.5/21.3
R832	7030008280	S.RES ERJ2GEJ 271 X (270)	B	60.9/17.4
R833	7030005080	S.RES ERJ2GEJ 823 X (82K)	B	55.3/19.6
R834	7030008270	S.RES RR0510P-104-D (100K)	B	55.9/18.2
R835	7030008270	S.RES RR0510P-104-D (100K)	B	54.6/20.5
R836	7030005120	S.RES ERJ2GEJ 102 X (1K)	B	56.9/21.3
R837	7030006010	S.RES RR0510P-472-D (4.7K)	T	55.6/19.1
R880	7030004990	S.RES ERJ2GEJ 221 X (220)	B	63.1/5.3
R881	7030007250	S.RES ERJ2GEJ 220 X (22)	B	59.0/13.6
R901	7030004980	S.RES ERJ2GEJ 101 X (100)	T	63.8/10.7
R902	7030007060	S.RES ERJ2GEJ 684X (680K)	T	62.5/11.2
R903	7030005100	S.RES ERJ2GEJ 154 X (150K)	B	74.4/15.3
R904	7030005120	S.RES ERJ2GEJ 102 X (1K)	B	71.9/17.0
R905	7030005100	S.RES ERJ2GEJ 154 X (150K)	B	71.9/17.9
R906	7030005810	S.RES RR0510P-152-D (1.5K)	B	69.5/13.2
R907	7030008270	S.RES RR0510P-104-D (100K)	B	72.7/6.1
R908	7030005120	S.RES ERJ2GEJ 102 X (1K)	B	75.4/6.1
R909	7030007250	S.RES ERJ2GEJ 220 X (22)	B	69.6/6.0
R910	7030005010	S.RES ERJ2GEJ 681 X (680)	T	73.7/9.9
R911	7030005590	S.RES ERJ2GEJ 680 X (68)	B	67.5/11.8
R912	7030009160	S.RES ERJ2GEJ 181 X (180)	B	68.7/6.0
R913	7030005000	S.RES ERJ2GEJ 471 X (470)	B	69.7/7.8
R914	7030007340	S.RES ERJ2GEJ 153 X (15K)	B	67.8/6.0
R915	7030005720	S.RES ERJ2GEJ 563 X (56K)	B	65.8/7.8
R917	7030008010	S.RES ERJ2GEJ 123 X (12K)	T	82.4/19.1
R918	7030004980	S.RES ERJ2GEJ 101 X (100)	T	85.4/15.4
R919	7030005060	S.RES ERJ2GEJ 333 X (33K)	T	82.4/18.2
R920	7030006010	S.RES RR0510P-472-D (4.7K)	T	82.4/17.3
R922	7030005170	S.RES ERJ2GEJ 474 X (470K)	T	78.5/7.9
R923	7030005600	S.RES ERJ2GEJ 273 X (27K)	T	80.8/17.3
R924	7030005120	S.RES ERJ2GEJ 102 X (1K)	T	83.5/12.2
R925	7030005240	S.RES ERJ2GEJ 473 X (47K)	T	81.4/12.6
R926	7030005810	S.RES RR0510P-152-D (1.5K)	T	82.3/11.0
R927	7030005100	S.RES ERJ2GEJ 154 X (150K)	T	78.8/9.7
R928	7030007340	S.RES ERJ2GEJ 153 X (15K)	T	77.1/9.8
R930	7030005720	S.RES ERJ2GEJ 563 X (56K)	T	83.5/13.2
R931	7030005720	S.RES ERJ2GEJ 563 X (56K)	T	80.3/14.3
R950	7030004970	S.RES ERJ2GEJ 470 X (47)	T	38.6/10.3
R951	7030007270	S.RES ERJ2GEJ 151 X (150)	T	25.5/8.7
R952	7030004990	S.RES ERJ2GEJ 221 X (220)	T	23.7/8.1
R954	7030010040	S.RES ERJ2GEJ-JPW	T	61.2/12.6
R955	7030008270	S.RES RR0510P-104-D (100K)	T	41.0/14.5
R956	7030008270	S.RES RR0510P-104-D (100K)	T	58.3/33.6
R959	7030004980	S.RES ERJ2GEJ 101 X (100)	T	23.2/4.2
R961	7030007290	S.RES ERJ2GEJ 222 X (2.2K)	B	30.9/7.3
R962	7030009290	S.RES ERJ2GEJ 562 X (5.6K)	T	85.1/20.3
R963	7030010130	S.RES ERJ2GEJ 6R8 X (6.8)	T	23.2/5.2
R968	7030005240	S.RES ERJ2GEJ 473 X (47K)	B	77.2/32.7
R973	7030005810	S.RES RR0510P-152-D (1.5K)	T	19.1/9.0
R974	7030007250	S.RES ERJ2GEJ 220 X (22)	T	16.4/10.4
R975	7030010010	S.RES ERJ2RKF 334 X (330K)	T	19.4/10.2
R976	7030010040	S.RES ERJ2GEJ-JPW	B	15.7/25.2
C1	4030017460	S.CER C1005 JB 1H 102K-T	T	25.2/27.0
C4	4030017460	S.CER C1005 JB 1H 102K-T	T	71.2/45.5
C5	4030017460	S.CER C1005 JB 1H 102K-T	T	27.9/20.4
C7	4030017460	S.CER C1005 JB 1H 102K-T	T	26.7/22.7
C8	4030017460	S.CER C1005 JB 1H 102K-T	B	14.0/6.8
C9	4030017460	S.CER C1005 JB 1H 102K-T	T	29.9/25.3
C10	4030017460	S.CER C1005 JB 1H 102K-T	T	69.3/45.5
C11	4030017350	S.CER C1005 CH 1H 020B-T	T	27.6/22.7
C12	4030017460	S.CER C1005 JB 1H 102K-T	B	25.5/44.4
C13	4030017030	S.CER C1005 JB 1A 273K-T	T	28.5/22.7
C14	4550008160	S.TAN F931A226MAA	B	23.7/42.1
C15	4030017460	S.CER C1005 JB 1H 102K-T	T	33.5/20.4
C18	4030017460	S.CER C1005 JB 1H 102K-T	B	23.5/44.4
C19	4030017420	S.CER C1005 CH 1H 470J-T	B	37.0/40.3
C20	4030017420	S.CER C1005 CH 1H 470J-T	T	86.0/30.5
C21	4520000020	S.NIO NOJC227M006RWJV	T	26.7/36.2
C22	4050000240	S.FEE NFM18PC104R1C3D	B	49.4/41.8
C23	4510010250	S.ELE 16 CE 22 LD	T	58.0/47.1
C24	4030017460	S.CER C1005 JB 1H 102K-T	T	62.0/45.5
C25	4520000020	S.NIO NOJC227M006RWJV	T	85.4/26.6
C26	4030019990	S.CER C1005 JB 1C 104K-T	B	58.3/44.2
C29	4030020310	S.CER GRM31CB31C106KA88L	B	51.1/43.4
C30	4030017630	S.CER C1005 CH 1H 120J-T	T	64.3/12.2
C31	4030017460	S.CER C1005 JB 1H 102K-T	B	66.1/41.0
C32	4030019460	S.CER C1608 JB 0J 106M-T	T	51.3/20.6
C33	4030017460	S.CER C1005 JB 1H 102K-T	T	54.8/26.8
C34	4030019990	S.CER C1005 JB 1C 104K-T	B	90.5/37.0
C35	4030020310	S.CER GRM31CB31C106KA88L	B	67.7/42.7
C36	4030016790	S.CER C1005 JB 1E 103K-T	T	62.5/13.1
C37	4030019990	S.CER C1005 JB 1C 104K-T	B	57.4/40.5
C38	4030018860	S.CER C1005 JB 0J 105K-T	B	90.5/36.1
C39	4030018860	S.CER C1005 JB 0J 105K-T	T	62.5/12.2
C40	4550007600	S.TAN F920J106MPABMA	T	56.2/27.7
C41	4030020310	S.CER GRM31CB31C106KA88L	B	88.8/11.5
C42	4030020310	S.CER GRM31CB31C106KA88L	B	88.8/13.6
C43	4030019120	S.CER GRM188B31E105KA75D	T	47.4/20.5
C44	4030017460	S.CER C1005 JB 1H 102K-T	T	71.0/40.5
C45	4030017620	S.CER C1005 CH 1H 100C-T	T	64.2/19.9
C46	4030019990	S.CER C1005 JB 1C 104K-T	B	90.5/35.2
C48	4030018900	S.CER C1005 JB 0J 474K-T	B	86.6/31.2
C49	4030017460	S.CER C1005 JB 1H 102K-T	T	62.5/20.8
C50	4030016970	S.CER C1005 JB 1E 223K-T	B	90.5/34.3
C52	4030018860	S.CER C1005 JB 0J 105K-T	T	48.7/36.1
C53	4030019120	S.CER GRM188B31E105KA75D	T	87.7/34.3
C55	4030019990	S.CER C1005 JB 1C 104K-T	T	48.7/35.2
C56	4030019120	S.CER GRM188B31E105KA75D	B	83.8/9.6
C57	4030019120	S.CER GRM188B31E105KA75D	T	52.6/20.6
C59	4030017730	S.CER C1005 JB 1H 471K-T	T	48.7/33.4
C61	4030020310	S.CER GRM31CB31C106KA88L	B	81.6/16.2
C62	4030017430	S.CER C1005 CH 1H 101J-T	T	22.5/21.6
C63	4030019490	S.CER C2012 JB 1A 106K-T	T	89.8/37.0

Eqv.= This component is equivalent to the REF No. component listed above, and may be substituted on parts orders and repairs.

M.=Mounted side (T: Mounted on the Top side, B: Mounted on the Bottom side)
S.=Surface mount

[MAIN UNIT]

REF NO.	PARTS NO.	DESCRIPTION	M.	H/V LOCATION
C64	4030020310	S.CER GRM31CB31C106KA88L	B	81.6/18.3
C65	4030017460	S.CER C1005 JB 1H 102K-T	T	22.5/20.7
C66	4030017640	S.CER C1005 CH 1H 150J-T	B	81.5/20.1
C67	4030017460	S.CER C1005 JB 1H 102K-T	T	49.0/31.9
C68	4030017460	S.CER C1005 JB 1H 102K-T	T	89.7/35.0
C69	4030019460	S.CER C1608 JB 0J 106M-T	B	87.9/22.6
C70	4030017460	S.CER C1005 JB 1H 102K-T	T	48.7/34.3
C71	4030017460	S.CER C1005 JB 1H 102K-T	T	20.9/20.7
C73	4030017460	S.CER C1005 JB 1H 102K-T	T	53.7/37.3
C74	4550008800	S.TAN 278M2002 104MR	T	49.5/39.5
C75	4030017460	S.CER C1005 JB 1H 102K-T	T	87.9/35.4
C78	4030017460	S.CER C1005 JB 1H 102K-T	T	24.0/14.3
C82	4030017460	S.CER C1005 JB 1H 102K-T	T	56.5/36.4
C84	4030017460	S.CER C1005 JB 1H 102K-T	T	25.8/14.2
C85	4030017460	S.CER C1005 JB 1H 102K-T	T	62.5/19.9
C87	4030017530	S.CER C1005 CH 1H 0R5B-T	B	33.7/37.1
C91	4030019990	S.CER C1005 JB 1C 104K-T	T	48.0/40.0
C92	4030017460	S.CER C1005 JB 1H 102K-T	T	47.6/41.2
C94	4030017460	S.CER C1005 JB 1H 102K-T	T	27.4/13.7
C96	4550008480	S.TAN F921C225MPA	T	44.6/41.2
C102	4550008150	S.TAN F921V224MAA	T	44.2/39.2
C110	4030017460	S.CER C1005 JB 1H 102K-T	T	56.3/39.3
C126	4030017460	S.CER C1005 JB 1H 102K-T	T	31.5/30.2
C127	4030019990	S.CER C1005 JB 1C 104K-T	T	26.1/29.0
C136	4030019460	S.CER C1608 JB 0J 106M-T	T	51.7/44.5
C143	4030019990	S.CER C1005 JB 1C 104K-T	T	54.0/45.5
C145	4030016790	S.CER C1005 JB 1E 103K-T	B	75.9/23.3
C150	4030017460	S.CER C1005 JB 1H 102K-T	B	82.1/9.2
C151	4030017460	S.CER C1005 JB 1H 102K-T	B	86.6/10.0
C166	4030017460	S.CER C1005 JB 1H 102K-T	T	37.2/27.2
C167	4030017340	S.CER C1005 CH 1H 010B-T	T	39.8/33.0
C169	4030017460	S.CER C1005 JB 1H 102K-T	T	59.5/30.6
C170	4030019990	S.CER C1005 JB 1C 104K-T	B	67.3/25.9
C171	4030019990	S.CER C1005 JB 1C 104K-T	B	69.2/25.9
C172	4030017620	S.CER C1005 CH 1H 100C-T	T	62.1/27.8
C173	4030016790	S.CER C1005 JB 1E 103K-T	T	36.1/20.4
C174	4030019990	S.CER C1005 JB 1C 104K-T	T	69.6/32.2
C175	4030019990	S.CER C1005 JB 1C 104K-T	T	71.2/32.2
C176	4550008160	S.TAN F931A226MAA	T	35.7/23.4
C177	4030017460	S.CER C1005 JB 1H 102K-T	T	17.2/45.1
C178	4030016790	S.CER C1005 JB 1E 103K-T	T	62.1/30.1
C179	4030017500	S.CER C1005 CH 1H 560J-T	T	60.4/32.2
C180	4030017460	S.CER C1005 JB 1H 102K-T	B	62.8/27.4
C181	4030016950	S.CER C1005 JB 1A 473K-T	T	71.5/34.0
C182	4030017570	S.CER C1005 CH 1H 040B-T	T	60.4/33.1
C183	4030017460	S.CER C1005 JB 1H 102K-T	T	25.6/30.2
C185	4030017590	S.CER C1005 CH 1H 070C-T	T	60.4/34.9
C186	4030017730	S.CER C1005 JB 1H 471K-T	B	69.3/29.2
C187	4030019990	S.CER C1005 JB 1C 104K-T	B	68.3/29.9
C189	4030017460	S.CER C1005 JB 1H 102K-T	T	16.0/39.5
C190	4030019990	S.CER C1005 JB 1C 104K-T	B	71.6/35.4
C192	4030017730	S.CER C1005 JB 1H 471K-T	B	70.2/29.2
C193	4030017460	S.CER C1005 JB 1H 102K-T	B	70.6/26.4
C194	4030016950	S.CER C1005 JB 1A 473K-T	T	17.2/44.1
C195	4030017360	S.CER C1005 CH 1H 030B-T	T	60.4/34.0
C196	4030019990	S.CER C1005 JB 1C 104K-T	B	72.1/32.3
C197	4030019990	S.CER C1005 JB 1C 104K-T	B	20.2/36.8
C198	4030016790	S.CER C1005 JB 1E 103K-T	T	17.2/42.1
C199	4030018860	S.CER C1005 JB 0J 105K-T	T	67.5/39.0
C200	4030017460	S.CER C1005 JB 1H 102K-T	B	18.5/35.6
C201	4030017460	S.CER C1005 JB 1H 102K-T	T	22.2/30.9
C202	4030016790	S.CER C1005 JB 1E 103K-T	B	72.1/34.1
C203	4030017460	S.CER C1005 JB 1H 102K-T	B	19.3/38.4
C204	4030017460	S.CER C1005 JB 1H 102K-T	B	22.1/38.4
C206	4030016790	S.CER C1005 JB 1E 103K-T	B	20.2/38.4
C207	4030017460	S.CER C1005 JB 1H 102K-T	T	15.1/39.5
C208	4030017460	S.CER C1005 JB 1H 102K-T	T	21.0/30.5
C210	4550007520	S.TAN F931A106MAABMA	T	64.5/39.3
C212	4030017460	S.CER C1005 JB 1H 102K-T	B	69.3/27.6
C214	4030017460	S.CER C1005 JB 1H 102K-T	B	72.1/33.2
C215	4030017460	S.CER C1005 JB 1H 102K-T	T	11.4/37.9
C216	4030017460	S.CER C1005 JB 1H 102K-T	B	13.2/38.5
C217	4030017460	S.CER C1005 JB 1H 102K-T	B	15.2/41.0
C218	4030017040	S.CER C1005 JB 1A 333K-T	B	62.6/32.8
C219	4030019990	S.CER C1005 JB 1C 104K-T	B	14.1/38.5
C220	4030017460	S.CER C1005 JB 1H 102K-T	B	13.9/40.9
C221	4030019560	S.CER GRM21BB31C106KE15L	B	16.2/44.2
C222	4030017460	S.CER C1005 JB 1H 102K-T	B	62.6/34.6
C223	4030019990	S.CER C1005 JB 1C 104K-T	B	15.0/37.6
C224	4030017630	S.CER C1005 CH 1H 120J-T	B	13.9/41.8
C225	4030017460	S.CER C1005 JB 1H 102K-T	B	14.2/44.2
C226	4030017670	S.CER C1005 CH 1H 390J-T	B	66.2/29.8
C228	4030019990	S.CER C1005 JB 1C 104K-T	B	64.0/29.6
C229	4030019990	S.CER C1005 JB 1C 104K-T	B	12.4/44.2
C230	4030016790	S.CER C1005 JB 1E 103K-T	T	17.2/39.3
C231	4030016790	S.CER C1005 JB 1E 103K-T	T	20.5/36.0
C232	4030019990	S.CER C1005 JB 1C 104K-T	B	59.7/28.2
C233	4030018890	S.CER C1005 JB 0J 224K-T	T	20.5/33.3
C234	4030016790	S.CER C1005 JB 1E 103K-T	T	18.5/31.7
C235	4030016790	S.CER C1005 JB 1E 103K-T	B	62.5/35.9
C236	4030017460	S.CER C1005 JB 1H 102K-T	T	12.5/34.5
C237	4030017460	S.CER C1005 JB 1H 102K-T	T	7.8/38.2
C238	4030016790	S.CER C1005 JB 1E 103K-T	B	57.3/33.6
C240	4030016790	S.CER C1005 JB 1E 103K-T	B	60.7/34.0
C242	4550007650	S.TAN F931V105MAABMA	T	16.9/29.0
C243	4030017460	S.CER C1005 JB 1H 102K-T	B	59.5/32.1
C244	4030017650	S.CER C1005 CH 1H 270J-T	B	58.2/33.6
C245	4030017420	S.CER C1005 CH 1H 470J-T	T	10.4/35.9
C246	4030017460	S.CER C1005 JB 1H 102K-T	T	20.5/35.1
C248	4030019990	S.CER C1005 JB 1C 104K-T	T	5.9/33.9
C250	4030017400	S.CER C1005 CH 1H 220J-T	T	10.1/33.6
C251	4030017460	S.CER C1005 JB 1H 102K-T	T	18.8/27.0
C252	4030017460	S.CER C1005 JB 1H 102K-T	T	5.0/33.9
C253	4030016790	S.CER C1005 JB 1E 103K-T	B	56.1/34.1
C254	4030017670	S.CER C1005 CH 1H 390J-T	T	8.8/34.1

[MAIN UNIT]

REF NO.	PARTS NO.	DESCRIPTION	M.	H/V LOCATION
C256	4030017600	S.CER C1005 CH 1H 080C-T	B	54.9/32.6
C259	4030017640	S.CER C1005 CH 1H 150J-T	B	51.1/30.5
C263	4030016790	S.CER C1005 JB 1E 103K-T	B	43.2/34.6
C264	4030017580	S.CER C1005 CH 1H 060C-T	B	44.5/35.0
C270	4030016790	S.CER C1005 JB 1E 103K-T	B	84.7/29.1
C271	4030020120	S.CER C1005 JB 0J 225M-T	B	86.6/30.3
C272	4030018860	S.CER C1005 JB 0J 105K-T	B	83.9/26.6
C273	4030020000	S.CER C1005 JB 1A 105K-T	B	80.5/28.1
C274	4030017760	S.CER C1005 JB 1H 222K-T	B	83.3/31.1
C327	4030017380	S.CER C1005 CH 1H 050B-T	T	31.9/29.0
C328	4030017460	S.CER C1005 JB 1H 102K-T	T	34.7/26.7
C329	4030017380	S.CER C1005 CH 1H 050B-T	T	36.7/28.5
C330	4030017460	S.CER C1005 JB 1H 102K-T	T	38.1/25.0
C331	4030017430	S.CER C1005 CH 1H 101J-T	B	64.0/28.7
C336	4030017460	S.CER C1005 JB 1H 102K-T	T	52.5/28.8
C337	4030016790	S.CER C1005 JB 1E 103K-T	B	55.9/29.0
C338	4030016790	S.CER C1005 JB 1E 103K-T	B	58.3/30.2
C340	4030016950	S.CER C1005 JB 1A 473K-T	B	52.9/26.5
C341	4030019990	S.CER C1005 JB 1C 104K-T	B	54.7/26.5
C346	4030017460	S.CER C1005 JB 1H 102K-T	T	31.2/23.6
C347	4030017460	S.CER C1005 JB 1H 102K-T	T	33.5/24.5
C348	4030017460	S.CER C1005 JB 1H 102K-T	T	30.2/27.8
C351	4030017430	S.CER C1005 CH 1H 101J-T	T	11.3/34.0
C352	4030019990	S.CER C1005 JB 1C 104K-T	T	31.4/27.3
C358	4030017420	S.CER C1005 CH 1H 470J-T	B	36.1/40.3
C360	4030018860	S.CER C1005 JB 0J 105K-T	B	78.1/40.2
C362	4030018860	S.CER C1005 JB 0J 105K-T	B	17.7/28.9
C363	4030020450	S.CER C1005 JB 0J 475M-T	B	61.3/31.6
C365	4030016790	S.CER C1005 JB 1E 103K-T	B	75.3/38.5
C366	4030017570	S.CER C1005 CH 1H 040B-T	T	88.0/26.5
C367	4030017570	S.CER C1005 CH 1H 040B-T	B	86.3/27.4
C368	4030017570	S.CER C1005 CH 1H 040B-T	T	87.0/21.0
C369	4030017570	S.CER C1005 CH 1H 040B-T	B	85.1/27.1
C370	4030017570	S.CER C1005 CH 1H 040B-T	T	89.8/26.5
C371	4030017570	S.CER C1005 CH 1H 040B-T	B	86.9/37.6
C372	4030017570	S.CER C1005 CH 1H 040B-T	T	26.4/33.8
C373	4030017570	S.CER C1005 CH 1H 040B-T	T	32.1/34.9
C401	4030017460	S.CER C1005 JB 1H 102K-T	T	30.3/4.7
C402	4030018860	S.CER C1005 JB 0J 105K-T	T	27.8/4.7
C403	4030018860	S.CER C1005 JB 0J 105K-T	T	29.0/1.9
C406	4030016790	S.CER C1005 JB 1E 103K-T	T	18.1/12.0
C407	4030018080	S.CER C1005 JB 1H 182K-T	T	16.9/11.6
C408	4030017750	S.CER C1005 JB 1H 122K-T	T	17.0/13.7
C409	4030017760	S.CER C1005 JB 1H 222K-T	T	15.4/13.7
C410	4030017630	S.CER C1005 CH 1H 120J-T	T	16.6/15.4
C411	4030017360	S.CER C1005 CH 1H 030B-T	T	14.9/18.0
C412	4030019990	S.CER C1005 JB 1C 104K-T	T	27.8/3.1
C415	4030016790	S.CER C1005 JB 1E 103K-T	T	30.4/6.8
C441	4030016970	S.CER C1005 JB 1E 223K-T	B	80.1/33.4
C442	4030019990	S.CER C1005 JB 1C 104K-T	B	81.4/32.2
C443	4030019990	S.CER C1005 JB 1C 104K-T	B	80.0/32.5
C445	4030017460	S.CER C1005 JB 1H 102K-T	B	82.0/37.9
C446	4030017460	S.CER C1005 JB 1H 102K-T	B	81.7/38.8
C447	4030017620	S.CER C1005 CH 1H 100C-T	B	87.8/34.9
C448	4030017460	S.CER C1005 JB 1H 102K-T	B	84.4/37.9
C450	4030018860	S.CER C1005 JB 0J 105K-T	T	50.3/11.8
C451	4030019990	S.CER C1005 JB 1C 104K-T	T	50.3/12.7
C452	4030017460	S.CER C1005 JB 1H 102K-T	T	50.3/13.7
C453	4030017730	S.CER C1005 JB 1H 471K-T	T	50.3/14.6
C454	4030017460	S.CER C1005 JB 1H 102K-T	T	50.1/16.2
C455	4550008800	S.TAN 278M2002 104MR	T	49.5/8.6
C456	4030017460	S.CER C1005 JB 1H 102K-T	T	45.4/10.8
C457	4030017460	S.CER C1005 JB 1H 102K-T	T	51.4/6.9
C458	4030019990	S.CER C1005 JB 1C 104K-T	T	50.9/8.1
C459	4550008480	S.TAN F921C225MPA	T	54.4/7.0
C460	4550008150	S.TAN F921V224MAA	T	54.9/8.9
C461	4030017460	S.CER C1005 JB 1H 102K-T	T	42.5/11.7
C462	4030019990	S.CER C1005 JB 1C 104K-T	T	43.0/7.0
C463	4030017460	S.CER C1005 JB 1H 102K-T	T	42.8/8.8
C464	4030017460	S.CER C1005 JB 1H 102K-T	T	39.4/34.2
C465	4030017430	S.CER C1005 CH 1H 101J-T	T	59.5/14.1
C466	4030017460	S.CER C1005 JB 1H 102K-T	T	39.4/35.1
C467	4030017430	S.CER C1005 CH 1H 101J-T	T	59.5/13.2
C468	4030017460	S.CER C1005 JB 1H 102K-T	T	42.4/37.7
C469	4030017430	S.CER C1005 CH 1H 101J-T	T	56.6/10.5
C470	4030017570	S.CER C1005 CH 1H 040B-T	T	44.5/18.5
C471	4030017570	S.CER C1005 CH 1H 040B-T	T	44.4/22.0
C472	4030017460	S.CER C1005 JB 1H 102K-T	T	42.8/18.5
C473	4030018900	S.CER C1005 JB 0J 474K-T	T	42.8/22.0
C474	4030017570	S.CER C1005 CH 1H 040B-T	T	48.0/26.4
C475	4030017570	S.CER C1005 CH 1H 040B-T	T	46.3/26.5
C476	4030017570	S.CER C1005 CH 1H 040B-T	T	47.1/30.1
C477	4030017460	S.CER C1005 JB 1H 102K-T	T	51.3/26.4
C478	4030017460	S.CER C1005 JB 1H 102K-T	T	53.5/28.8
C479	4030017460	S.CER C1005 JB 1H 102K-T	T	44.7/26.5
C480	4030017460	S.CER C1005 JB 1H 102K-T	T	45.5/30.1
C481	4030017570	S.CER C1005 CH 1H 040B-T	T	49.6/26.4
C485	4030017460	S.CER C1005 JB 1H 102K-T	T	46.1/18.5
C503	4030017460	S.CER C1005 JB 1H 102K-T	T	12.0/8.0
C504	4030017460	S.CER C1005 JB 1H 102K-T	T	14.8/8.1
C505	4030007080	S.CER C1608 CH 1H 390J-T	T	6.3/25.2
C507	4030020100	S.CER GQM1882C1H110GB01D [EUR]	T	9.8/25.2
	4030020100	S.CER GQM1882C1H110GB01D [UK]		
	4030020100	S.CER GQM1882C1H110GB01D [ITR]		
	4030007010	S.CER C1608 CH 1H 100D-T [USA]		
	4030020100	S.CER GQM1882C1H110GB01D [KOR]		
	4030020100	S.CER GQM1882C1H110GB01D [EXP]		
	4030020100	S.CER GQM1882C1H110GB01D [EXP-01]		
	4030020100	S.CER GQM1882C1H110GB01D [AUS]		
C508	4030020100	S.CER GQM1882C1H110GB01D	T	11.0/25.2
C509	4030017460	S.CER C1005 JB 1H 102K-T	B	6.5/24.3

Eqv.= This component is equivalent to the REF No. component listed above, and may be substituted on parts orders and repairs.

M.=Mounted side (T: Mounted on the Top side, B: Mounted on the Bottom side)
S.=Surface mount

[MAIN UNIT]

REF NO.	PARTS NO.	DESCRIPTION	M.	H/V LOCATION
C510	4030017590	S.CER C1005 CH 1H 070C-T [EUR]	T	12.3/22.6
	4030017590	S.CER C1005 CH 1H 070C-T [UK]		
	4030017590	S.CER C1005 CH 1H 070C-T [ITR]		
	4030017600	S.CER C1005 CH 1H 080C-T [USA]		
	4030017590	S.CER C1005 CH 1H 070C-T [KOR]		
	4030017590	S.CER C1005 CH 1H 070C-T [EXP]		
	4030017590	S.CER C1005 CH 1H 070C-T [EXP-01]		
	4030017590	S.CER C1005 CH 1H 070C-T [AUS]		
C511	4030007120	S.CER C1608 CH 1H 820J-T	T	1.8/25.2
C512	4030017420	S.CER C1005 CH 1H 470J-T	T	12.3/21.0
C513	4030017460	S.CER C1005 JB 1H 102K-T	T	14.1/17.0
C514	4030017460	S.CER C1005 JB 1H 102K-T	T	11.6/18.2
C515	4030017460	S.CER C1005 JB 1H 102K-T	T	14.1/14.6
C516	4030017430	S.CER C1005 CH 1H 101J-T	T	3.5/23.2
C517	4030017460	S.CER C1005 JB 1H 102K-T	B	5.2/23.9
C518	4030017460	S.CER C1005 JB 1H 102K-T	T	10.7/22.9
C519	4030017440	S.CER C1005 CH 1H 221J-T	B	7.9/20.0
C520	4030017520	S.CER C1005 CH 1H 0R3B-T	B	11.2/21.3
C521	4030017640	S.CER C1005 CH 1H 150J-T	T	3.5/22.3
C522	4030017570	S.CER C1005 CH 1H 040B-T	B	17.4/17.7
C524	4030017580	S.CER C1005 CH 1H 060C-T	B	15.8/18.6
C525	4030017640	S.CER C1005 CH 1H 150J-T	T	10.7/21.5
C526	4030017530	S.CER C1005 CH 1H 0R5B-T	B	13.7/17.2
C527	4030017460	S.CER C1005 JB 1H 102K-T	B	8.3/16.2
C528	4030017590	S.CER C1005 CH 1H 070C-T	B	17.1/15.0
C529	4030017620	S.CER C1005 CH 1H 100C-T	B	15.2/12.4
C530	4030020000	S.CER C1005 JB 1A 105K-T	B	13.1/23.1
C531	4030017460	S.CER C1005 JB 1H 102K-T	B	17.1/14.0
C532	4030017520	S.CER C1005 CH 1H 0R3B-T	B	12.3/17.0
C533	4030017460	S.CER C1005 JB 1H 102K-T	B	3.9/21.5
C536	4030017520	S.CER C1005 CH 1H 0R3B-T	B	13.4/16.0
C539	4030017590	S.CER C1005 CH 1H 070C-T	B	13.3/12.1
C540	4030017460	S.CER C1005 JB 1H 102K-T	B	17.9/10.5
C541	4030017440	S.CER C1005 CH 1H 221J-T	B	7.9/12.8
C543	4030017460	S.CER C1005 JB 1H 102K-T	B	2.2/20.7
C544	4030019990	S.CER C1005 JB 1C 104K-T	T	3.5/21.4
C545	4030017600	S.CER C1005 CH 1H 080C-T	B	12.0/12.6
C546	4030017530	S.CER C1005 CH 1H 0R5B-T	T	1.6/19.9
C547	4030017390	S.CER C1005 CH 1H 180J-T	T	1.9/21.4
C548	4030017670	S.CER C1005 CH 1H 390J-T	B	12.0/11.4
C549	4030017350	S.CER C1005 CH 1H 020B-T	T	2.5/19.9
C550	4030017570	S.CER C1005 CH 1H 040B-T	B	10.3/11.4
C551	4030017430	S.CER C1005 CH 1H 101J-T	B	9.2/9.9
C552	4030017530	S.CER C1005 CH 1H 0R5B-T	T	6.6/18.6
C553	4030017650	S.CER C1005 CH 1H 270J-T	T	2.1/18.0
C554	4030017590	S.CER C1005 CH 1H 070C-T	B	8.7/11.4
C555	4030017340	S.CER C1005 CH 1H 010B-T	T	8.6/20.0
C556	4030017650	S.CER C1005 CH 1H 270J-T	T	8.0/15.6
C560	4030017460	S.CER C1005 JB 1H 102K-T	B	3.9/20.6
C602	4030017630	S.CER C1005 CH 1H 120J-T	B	49.6/25.1
C603	4030018070	S.CER C1005 CH 1H 300J-T	B	49.7/20.8
C604	4030017340	S.CER C1005 CH 1H 010B-T	B	48.6/23.3
C605	4030017340	S.CER C1005 CH 1H 010B-T	B	47.3/21.9
C606	4030018860	S.CER C1005 JB 0J 105K-T	B	39.2/20.4
C607	4030018070	S.CER C1005 CH 1H 300J-T	B	46.0/19.9
C608	4030017460	S.CER C1005 JB 1H 102K-T	B	48.6/19.9
C609	4030017460	S.CER C1005 JB 1H 102K-T	B	39.2/19.5
C610	4030017510	S.CER C1005 CH 1H 680J-T	B	43.6/22.3
C613	4030017460	S.CER C1005 JB 1H 102K-T	B	39.2/17.7
C614	4030017430	S.CER C1005 CH 1H 101J-T	B	42.2/14.4
C615	4030017350	S.CER C1005 CH 1H 020B-T	B	42.2/12.7
C616	4030017460	S.CER C1005 JB 1H 102K-T	B	39.6/11.4
C617	4030017530	S.CER C1005 CH 1H 0R5B-T	B	39.6/13.9
C619	4030017380	S.CER C1005 CH 1H 050B-T	B	37.0/12.6
C620	4030017540	S.CER C1005 CH 1H R75B-T	B	35.5/11.9
C621	4030019990	S.CER C1005 JB 1C 104K-T	B	32.7/4.9
C623	4030017350	S.CER C1005 CH 1H 020B-T	B	31.3/6.1
C625	4030017340	S.CER C1005 CH 1H 010B-T	B	28.8/7.2
C626	4030018860	S.CER C1005 JB 0J 105K-T	B	27.9/7.2
C627	4030017460	S.CER C1005 JB 1H 102K-T	B	26.1/7.2
C630	4030017590	S.CER C1005 CH 1H 070C-T	B	23.4/5.4
C631	4030017600	S.CER C1005 CH 1H 080C-T	B	22.1/6.0
C634	4030017580	S.CER C1005 CH 1H 060C-T	B	20.8/6.4
C635	4030017460	S.CER C1005 JB 1H 102K-T	B	19.0/9.1
C641	4030017630	S.CER C1005 CH 1H 120J-T	B	52.3/10.1
C642	4030018070	S.CER C1005 CH 1H 300J-T	B	52.6/5.8
C643	4030017340	S.CER C1005 CH 1H 010B-T	B	51.6/8.8
C644	4030017340	S.CER C1005 CH 1H 010B-T	B	51.6/7.0
C645	4030017460	S.CER C1005 JB 1H 102K-T	B	47.8/9.2
C646	4030018070	S.CER C1005 CH 1H 300J-T	B	49.9/5.8
C647	4030017460	S.CER C1005 JB 1H 102K-T	B	51.2/4.6
C648	4030017460	S.CER C1005 JB 1H 102K-T	B	47.8/10.1
C649	4030017510	S.CER C1005 CH 1H 680J-T	B	49.0/7.9
C652	4030017460	S.CER C1005 JB 1H 102K-T	B	46.2/9.2
C653	4030017430	S.CER C1005 CH 1H 101J-T	B	42.9/8.2
C654	4030017350	S.CER C1005 CH 1H 020B-T	B	42.4/7.0
C655	4030017530	S.CER C1005 CH 1H 0R5B-T	B	39.8/8.2
C657	4030017540	S.CER C1005 CH 1H R75B-T	B	35.6/7.2
C658	4030017380	S.CER C1005 CH 1H 050B-T	B	37.0/7.4
C659	4030017460	S.CER C1005 JB 1H 102K-T	B	39.8/9.4
C701	4030017640	S.CER C1005 CH 1H 150J-T	B	39.0/27.3
C702	4030017460	S.CER C1005 JB 1H 102K-T	B	34.2/22.8
C703	4030017430	S.CER C1005 CH 1H 101J-T	B	34.6/27.1
C704	4030017530	S.CER C1005 CH 1H 0R5B-T	B	37.5/25.8
C705	4030017660	S.CER C1005 CH 1H 330J-T	B	36.6/25.8
C706	4030018860	S.CER C1005 JB 0J 105K-T	B	35.1/21.0
C707	4030017430	S.CER C1005 CH 1H 101J-T	B	34.6/24.3
C708	4030017460	S.CER C1005 JB 1H 102K-T	B	34.2/25.8
C709	4030017460	S.CER C1005 JB 1H 102K-T	B	34.2/21.0
C710	4030017460	S.CER C1005 JB 1H 102K-T	B	37.1/23.2
C711	4030017430	S.CER C1005 CH 1H 101J-T	B	37.4/15.3
C712	4030017460	S.CER C1005 JB 1H 102K-T	B	14.9/24.0
C713	4030017460	S.CER C1005 JB 1H 102K-T	B	34.6/19.6
C714	4030017360	S.CER C1005 CH 1H 030B-T	B	34.8/14.9
C715	4030017430	S.CER C1005 CH 1H 101J-T	B	32.9/13.3

[MAIN UNIT]

REF NO.	PARTS NO.	DESCRIPTION	M.	H/V LOCATION
C716	4030017350	S.CER C1005 CH 1H 020B-T	B	29.9/11.2
C717	4030017690	S.CER C1005 CH 1H 121J-T	B	32.2/9.8
C718	4030017600	S.CER C1005 CH 1H 080C-T	B	24.8/10.7
C719	4030017560	S.CER C1005 CH 1H 2R5B-T	B	22.2/9.4
C722	4030017460	S.CER C1005 JB 1H 102K-T	B	21.8/8.2
C723	4030017460	S.CER C1005 JB 1H 102K-T	B	20.2/14.4
C724	4030017670	S.CER C1005 CH 1H 390J-T	B	17.8/23.1
C725	4030017460	S.CER C1005 JB 1H 102K-T	B	17.8/19.1
C726	4030017610	S.CER C1005 CH 1H 090C-T	B	37.4/17.1
C740	4030017640	S.CER C1005 CH 1H 150J-T	B	55.0/18.2
C741	4030017430	S.CER C1005 CH 1H 101J-T	B	52.9/18.2
C742	4030017530	S.CER C1005 CH 1H 0R5B-T	B	51.1/20.3
C743	4030017660	S.CER C1005 CH 1H 330J-T	B	51.5/19.4
C744	4030017460	S.CER C1005 JB 1H 102K-T	B	48.7/17.4
C745	4030017430	S.CER C1005 CH 1H 101J-T	B	50.3/16.2
C746	4030017440	S.CER C1005 CH 1H 221J-T	B	51.2/16.2
C748	4030017460	S.CER C1005 JB 1H 102K-T	B	48.3/16.2
C749	4030017610	S.CER C1005 CH 1H 090C-T	B	48.4/13.8
C750	4030017430	S.CER C1005 CH 1H 101J-T	B	49.3/13.8
C751	4030017460	S.CER C1005 JB 1H 102K-T	B	45.1/16.9
C752	4030017360	S.CER C1005 CH 1H 030B-T	B	44.2/14.2
C753	4030017430	S.CER C1005 CH 1H 101J-T	B	38.4/9.4
C754	4030017350	S.CER C1005 CH 1H 020B-T	B	30.7/10.3
C755	4030017460	S.CER C1005 JB 1H 102K-T	B	34.7/9.8
C756	4030017460	S.CER C1005 JB 1H 102K-T	B	29.5/9.8
C757	4030017460	S.CER C1005 JB 1H 102K-T	T	29.1/11.7
C780	4030016790	S.CER C1005 JB 1E 103K-T	T	26.4/8.7
C781	4030017430	S.CER C1005 CH 1H 101J-T	T	19.0/14.7
C782	4030016790	S.CER C1005 JB 1E 103K-T	T	25.5/7.1
C783	4030017400	S.CER C1005 CH 1H 220J-T	T	18.0/14.8
C784	4030017610	S.CER C1005 CH 1H 090C-T	T	18.0/16.4
C785	4030017660	S.CER C1005 CH 1H 330J-T	T	19.3/19.7
C786	4030017670	S.CER C1005 CH 1H 390J-T	T	17.7/17.6
C788	4030017460	S.CER C1005 JB 1H 102K-T	T	16.5/17.0
C789	4030017430	S.CER C1005 CH 1H 101J-T	B	15.4/22.8
C791	4030017460	S.CER C1005 JB 1H 102K-T	T	35.6/35.3
C792	4030017460	S.CER C1005 JB 1H 102K-T	B	38.6/40.6
C793	4030017430	S.CER C1005 CH 1H 101J-T	B	33.7/35.5
C794	4030017340	S.CER C1005 CH 1H 010B-T	B	34.9/35.3
C795	4030018860	S.CER C1005 JB 0J 105K-T	B	42.3/41.9
C796	4030017570	S.CER C1005 CH 1H 040B-T	B	43.5/40.8
C797	4030017570	S.CER C1005 CH 1H 040B-T	B	34.9/40.5
C801	4030017460	S.CER C1005 JB 1H 102K-T	B	47.5/29.2
C802	4030017400	S.CER C1005 CH 1H 220J-T	B	45.9/28.2
C803	4030016790	S.CER C1005 JB 1E 103K-T	B	47.5/28.2
C804	4030017460	S.CER C1005 JB 1H 102K-T	B	50.5/25.1
C805	4030017460	S.CER C1005 JB 1H 102K-T	B	46.1/24.2
C806	4030017350	S.CER C1005 CH 1H 020B-T	B	44.6/26.6
C811	4030017460	S.CER C1005 JB 1H 102K-T	B	56.4/10.3
C812	4030017640	S.CER C1005 CH 1H 150J-T	B	56.4/12.1
C813	4030016790	S.CER C1005 JB 1E 103K-T	B	55.8/9.4
C814	4030017460	S.CER C1005 JB 1H 102K-T	B	54.1/13.4
C815	4030017460	S.CER C1005 JB 1H 102K-T	B	53.2/13.4
C817	4030017350	S.CER C1005 CH 1H 020B-T	B	53.2/15.0
C820	4030017460	S.CER C1005 JB 1H 102K-T	B	41.2/31.0
C821	4030017400	S.CER C1005 CH 1H 220J-T	B	39.6/31.9
C822	4030016790	S.CER C1005 JB 1E 103K-T	B	41.2/31.9
C823	4030017460	S.CER C1005 JB 1H 102K-T	B	42.2/30.0
C824	4030017460	S.CER C1005 JB 1H 102K-T	B	40.1/26.0
C825	4030017590	S.CER C1005 CH 1H 070C-T	B	41.0/25.8
C826	4030017400	S.CER C1005 CH 1H 220J-T	B	42.2/25.8
C830	4030017460	S.CER C1005 JB 1H 102K-T	B	58.5/19.5
C831	4030017640	S.CER C1005 CH 1H 150J-T	B	60.9/16.5
C832	4030016790	S.CER C1005 JB 1E 103K-T	B	58.5/20.4
C833	4030017460	S.CER C1005 JB 1H 102K-T	B	54.2/21.5
C834	4030017460	S.CER C1005 JB 1H 102K-T	B	56.9/19.5
C836	4030017460	S.CER C1005 JB 1H 102K-T	B	56.9/20.4
C850	4030017420	S.CER C1005 CH 1H 470J-T	B	66.0/15.6
C852	4030017460	S.CER C1005 JB 1H 102K-T	B	67.8/17.8
C853	4030017460	S.CER C1005 JB 1H 102K-T	B	62.6/18.4
C854	4030017460	S.CER C1005 JB 1H 102K-T	B	62.6/16.6
C855	4030017460	S.CER C1005 JB 1H 102K-T	B	67.8/16.8
C856	4030017420	S.CER C1005 CH 1H 470J-T	B	62.6/17.5
C858	4030017420	S.CER C1005 CH 1H 470J-T	B	65.7/14.3
C859	4030017420	S.CER C1005 CH 1H 470J-T	B	62.2/20.2
C860	4030017430	S.CER C1005 CH 1H 101J-T	B	62.2/14.3
C861	4030017420	S.CER C1005 CH 1H 470J-T	B	64.7/22.6
C862	4030017460	S.CER C1005 JB 1H 102K-T	T	85.1/21.2
C863	4030018860	S.CER C1005 JB 0J 105K-T	T	22.6/8.1
C864	4030018860	S.CER C1005 JB 0J 105K-T	T	20.3/10.2
C865	4030017460	S.CER C1005 JB 1H 102K-T	T	85.1/19.4
C880	4030016790	S.CER C1005 JB 1E 103K-T	B	64.6/7.4
C881	4030017590	S.CER C1005 CH 1H 070C-T	B	63.1/7.0
C882	4030017390	S.CER C1005 CH 1H 180J-T	B	56.4/7.2
C883	4030017580	S.CER C1005 CH 1H 060C-T	B	60.6/13.6
C884	4030016790	S.CER C1005 JB 1E 103K-T	B	59.0/14.5
C900	4030017390	S.CER C1005 CH 1H 180J-T	T	77.1/10.7
C901	4030017460	S.CER C1005 JB 1H 102K-T	T	64.7/10.7
C903	4030017390	S.CER C1005 CH 1H 180J-T	T	60.4/16.6
C904	4030016790	S.CER C1005 JB 1E 103K-T	T	62.5/10.3
C906	4030017630	S.CER C1005 CH 1H 120J-T	T	62.2/7.0
C907	4030017350	S.CER C1005 CH 1H 020B-T	T	62.7/8.2
C908	4030017630	S.CER C1005 CH 1H 120J-T	T	63.1/7.0
C909	4030017730	S.CER C1005 JB 1H 471K-T	B	73.1/17.5
C910	4030019990	S.CER C1005 JB 1C 104K-T	T	75.9/10.2
C911	4030019990	S.CER C1005 JB 1C 104K-T	B	71.0/15.3
C912	4030017730	S.CER C1005 JB 1H 471K-T	B	74.3/16.6
C913	4030017460	S.CER C1005 JB 1H 102K-T	B	70.3/17.9
C914	4030017350	S.CER C1005 CH 1H 020B-T	T	64.1/9.0
C915	4030019990	S.CER C1005 JB 1C 104K-T	B	73.1/15.7
C916	4030018860	S.CER C1005 JB 0J 105K-T	B	69.0/12.0
C917	4030016790	S.CER C1005 JB 1E 103K-T	B	68.3/13.0
C918	4550007520	S.TAN F931A106MAABMA	T	74.9/6.6
C919	4030017460	S.CER C1005 JB 1H 102K-T	B	75.2/16.9
C920	4030017460	S.CER C1005 JB 1H 102K-T	B	72.2/15.7

Eqv.= This component is equivalent to the REF No. component listed above, and may be substituted on parts orders and repairs.

M.=Mounted side (T: Mounted on the Top side, B: Mounted on the Bottom side)
S.=Surface mount

[MAIN UNIT]

REF NO.	PARTS NO.	DESCRIPTION	M.	H/V LOCATION
C921	4030017040	S.CER C1005 JB 1A 333K-T	B	71.5/5.6
C922	4030017460	S.CER C1005 JB 1H 102K-T	B	71.5/6.5
C923	4030017670	S.CER C1005 CH 1H 390J-T	B	74.5/6.1
C924	4030020450	S.CER C1005 JB 0J 475M-T	T	73.3/8.6
C925	4030016790	S.CER C1005 JB 1E 103K-T	B	69.5/10.3
C926	4030016790	S.CER C1005 JB 1E 103K-T	B	66.7/7.8
C927	4030016790	S.CER C1005 JB 1E 103K-T	B	68.6/10.3
C928	4030017460	S.CER C1005 JB 1H 102K-T	B	70.1/4.8
C929	4030017390	S.CER C1005 CH 1H 180J-T	B	67.6/7.8
C930	4030019990	S.CER C1005 JB 1C 104K-T	T	85.1/11.4
C931	4030017460	S.CER C1005 JB 1H 102K-T	T	84.1/11.0
C932	4030018900	S.CER C1005 JB 0J 474K-T	T	83.8/14.5
C933	4030016790	S.CER C1005 JB 1E 103K-T	T	81.4/11.0
C934	4550008160	S.TAN F931A226MAA	T	78.8/15.6
C935	4030018860	S.CER C1005 JB 0J 105K-T	T	78.9/19.1
C936	4030018860	S.CER C1005 JB 0J 105K-T	T	83.8/18.6
C937	4030016790	S.CER C1005 JB 1E 103K-T	T	83.8/16.8
C938	4030017460	S.CER C1005 JB 1H 102K-T	T	80.8/18.2
C939	4030018860	S.CER C1005 JB 0J 105K-T	B	76.1/16.9
C940	4030017460	S.CER C1005 JB 1H 102K-T	B	73.6/19.7
C941	4030019990	S.CER C1005 JB 1C 104K-T	T	82.3/12.6
C951	4030019990	S.CER C1005 JB 1C 104K-T	T	29.1/12.6
C952	4030019990	S.CER C1005 JB 1C 104K-T	T	29.1/13.6
C953	4030019990	S.CER C1005 JB 1C 104K-T	T	31.0/8.7
C954	4030019990	S.CER C1005 JB 1C 104K-T	T	29.1/14.6
C955	4030019990	S.CER C1005 JB 1C 104K-T	B	64.7/24.2
C956	4030019990	S.CER C1005 JB 1C 104K-T	T	29.1/10.8
C957	4550008490	S.TAN F920J226MPA	T	36.0/7.7
C958	4030019990	S.CER C1005 JB 1C 104K-T	T	29.1/15.5
C959	4030017400	S.CER C1005 CH 1H 220J-T	B	73.4/23.1
C960	4030017400	S.CER C1005 CH 1H 220J-T	B	74.6/22.9
C961	4030016950	S.CER C1005 JB 1A 473K-T	T	38.6/15.3
C962	4030019990	S.CER C1005 JB 1C 104K-T	T	38.6/14.4
C963	4030017400	S.CER C1005 CH 1H 220J-T	T	38.6/13.5
C964	4030017460	S.CER C1005 JB 1H 102K-T	B	17.8/25.2
C965	4030019990	S.CER C1005 JB 1C 104K-T	T	24.6/8.1
C966	4030016790	S.CER C1005 JB 1E 103K-T	T	27.3/5.9
C967	4030018860	S.CER C1005 JB 0J 105K-T	T	31.6/3.7
C969	4030017460	S.CER C1005 JB 1H 102K-T	B	50.2/13.3
C970	4030017340	S.CER C1005 CH 1H 010B-T	B	47.3/22.8
C971	4030017530	S.CER C1005 CH 1H 0R5B-T	B	39.2/22.5
C972	4030017340	S.CER C1005 CH 1H 010B-T	B	51.6/7.9
C973	4030017530	S.CER C1005 CH 1H 0R5B-T	B	50.2/10.1
C974	4030017460	S.CER C1005 JB 1H 102K-T	T	42.2/30.0
C975	4030018860	S.CER C1005 JB 0J 105K-T	B	14.0/23.1
C976	4030017340	S.CER C1005 CH 1H 010B-T	B	18.1/21.8
C977	4030018860	S.CER C1005 JB 0J 105K-T	B	80.4/36.2
C978	4030017720	S.CER C1005 JB 1H 331K-T	B	77.2/33.6
C979	4030018860	S.CER C1005 JB 0J 105K-T	B	74.6/34.3
C980	4030018860	S.CER C1005 JB 0J 105K-T	B	75.4/35.8
C981	4030017400	S.CER C1005 CH 1H 220J-T	T	38.6/12.0
C982	4030017440	S.CER C1005 CH 1H 221J-T	T	47.3/11.5
C986	4030017460	S.CER C1005 JB 1H 102K-T	T	18.5/7.0
C988	4030017420	S.CER C1005 CH 1H 470J-T	B	67.8/18.7
C989	4030017460	S.CER C1005 JB 1H 102K-T	T	62.4/41.2
C990	4030017430	S.CER C1005 CH 1H 101J-T	T	19.4/12.3
C991	4030018900	S.CER C1005 JB 0J 474K-T	T	40.8/37.7
C992	4030018900	S.CER C1005 JB 0J 474K-T	T	58.2/10.5
C993	4030018900	S.CER C1005 JB 0J 474K-T	T	59.1/12.0
C994	4030017460	S.CER C1005 JB 1H 102K-T	B	80.9/35.0
C995	4030017620	S.CER C1005 CH 1H 100C-T	T	86.1/33.4
C996	4030017620	S.CER C1005 CH 1H 100C-T	T	84.9/31.6
C997	4030017620	S.CER C1005 CH 1H 100C-T	T	84.0/31.9
C998	4030017620	S.CER C1005 CH 1H 100C-T	T	81.1/41.4
C999	4030017570	S.CER C1005 CH 1H 040B-T	B	80.5/37.6
C1000	4030017570	S.CER C1005 CH 1H 040B-T	B	79.6/37.6
C1001	4030019120	S.CER GRM188B31E105KA75D	B	64.2/44.9
J2	6450000870	CON HEC2711-01-020		
J3	6510028130	S.CON AXK5S50047YG	T	78.9/37.2
J4	6510025880	CON TC38-108-01 <CFE>		
J5	6450000131	CON HSJ1102-018540		
J450	6510029520	S.CON AXK5F12347YG	T	44.1/33.8
J451	6510029520	S.CON AXK5F12347YG	T	55.0/14.3
S2	2260001900	SWI SW-149 (SKHLLD)		
EP2	6910019100	S.BEA MPZ1608S101AT	T	30.7/32.0
EP3	6910023820	S.BEA MPZ2012S101A-T	B	80.5/41.4
EP4	6910019100	S.BEA MPZ1608S101AT	T	26.8/20.6
EP5	6910019100	S.BEA MPZ1608S101AT	T	70.8/43.2
EP6	6910019100	S.BEA MPZ1608S101AT	T	69.5/43.2
EP7	6910023920	S.BEA BLM15GA750SN1D	B	26.4/45.5
EP8	6910023920	S.BEA BLM15GA750SN1D	B	21.4/43.7
EP9	6910023920	S.BEA BLM15GA750SN1D	B	23.5/45.5
EP10	6910012350	S.BEA MMZ1608Y 102BT	B	28.0/39.9
EP11	6910023920	S.BEA BLM15GA750SN1D	B	33.9/41.4
EP12	6910014680	S.BEA MMZ1608Y 121BT	B	30.2/43.6
EP13	6910018460	S.BEA MMZ1005Y102C-T	T	17.2/41.1
EP14	6910021230	S.BEA MMZ2012Y102BT	B	16.9/35.1
EP15	6910018460	S.BEA MMZ1005Y102C-T	T	17.2/40.2
EP16	6910019100	S.BEA MPZ1608S101AT	T	16.6/25.4
EP18	6910019100	S.BEA MPZ1608S101AT	T	29.7/19.9
EP19	6910018460	S.BEA MMZ1005Y102C-T	T	53.0/30.0
EP21	6910023540	S.E.O N010M9-01C000CR <CCP>	T	89.1/28.6
EP22	6910023540	S.E.O N010M9-01C000CR <CCP>	T	89.1/21.4
EP23	6910023920	S.BEA BLM15GA750SN1D	B	85.7/36.6
EP40	6910018460	S.BEA MMZ1005Y102C-T	T	60.3/15.1
EP450	6910018460	S.BEA MMZ1005Y102C-T	T	49.3/18.6
EP501	6910018460	S.BEA MMZ1005Y102C-T	T	13.5/10.0
EP780	6910018460	S.BEA MMZ1005Y102C-T	T	33.5/35.3
EP781	6910016330	S.BEA MMZ1005S 601CT-S	B	81.7/33.4

[MAIN UNIT]

REF NO.	PARTS NO.	DESCRIPTION	M.	H/V LOCATION
EP782	6910023920	S.BEA BLM15GA750SN1D	B	84.4/39.7
EP783	6910023920	S.BEA BLM15GA750SN1D	B	83.2/38.4
EP784	6910014690	S.BEA MPZ1608S221A-T	B	65.0/43.0
EP785	6910023920	S.BEA BLM15GA750SN1D	B	82.7/39.9
EP786	6910023920	S.BEA BLM15GA750SN1D	B	85.7/35.2
EP787	6910024150	S.BEA BLM15GG221SN1D	B	80.5/39.2
EP788	6910024150	S.BEA BLM15GG221SN1D	B	79.6/39.2

Eqv.= This component is equivalent to the REF No. component listed above, and may be substituted on parts orders and repairs.

M.=Mounted side (T: Mounted on the Top side, B: Mounted on the Bottom side)
S.=Surface mount

[VCO1 UNIT]

REF NO.	PARTS NO.	DESCRIPTION	M.	H/V LOCATION
Q1	1590004070	S.TRA LDTC144EET1G <SLVJ>	T	7.5/1.3
Q27	1530003260	S.TRA 2SC5006-T1	T	16.6/5.4
Q200	1530003260	S.TRA 2SC5006-T1	T	16.4/8.9
Q201	1530003260	S.TRA 2SC5006-T1	T	5.4/7.8
Q202	1530003260	S.TRA 2SC5006-T1	T	5.6/11.0
Q308	1590004090	S.TRA LDTC114YET1G <SLVJ>	T	7.3/12.9
Q311	1530003260	S.TRA 2SC5006-T1	T	17.3/15.3
D1	1750001700	S.DIO HSC277TRF-E	T	12.3/2.5
D10	1750001610	S.VAR HVC365TRF-E	T	9.3/1.6
D11	1750000721	S.VAR HVC375BTRF-E	T	10.5/4.1
D12	1750000711	S.VAR HVC350BTRF-E	T	10.5/1.6
D53	1750002540	S.DIO LRB520G-30T1G <SLVJ>	T	8.8/6.7
D103	1750002540	S.DIO LRB520G-30T1G <SLVJ>	T	10.5/6.5
D304	1750001610	S.VAR HVC365TRF-E	T	10.7/11.4
D305	1750001610	S.VAR HVC365TRF-E	T	10.5/13.9
D306	1750001610	S.VAR HVC365TRF-E	T	9.3/12.9
D308	1750001700	S.DIO HSC277TRF-E	T	12.4/12.3
L3	6200010630	S.COI LQW18AN8N2D00D	T	15.0/1.7
L4	6200012170	S.COI MLG1608S R18J-T	T	7.6/2.9
L5	6200010630	S.COI LQW18AN8N2D00D	T	14.3/3.7
L6	6200014760	S.COI MLK1005SR22JT	T	12.4/6.3
L200	6200014760	S.COI MLK1005SR22JT	T	5.0/6.0
L201	6200013750	S.COI MLK1005SR10JT	T	4.8/9.5
L202	6200013860	S.COI MLK1005S12NJT	T	3.4/11.9
L203	6200007931	S.COI ELJRF 12NJFB	T	3.4/4.8
L204	6200013800	S.COI MLK1005S39NJT	T	14.8/9.0
L302	6200012170	S.COI MLG1608S R18J-T	T	7.5/14.5
L306	6200009280	S.COI LQW18AN27NG00D (LQW1608A27NG00)	T	14.3/13.5
L307	6200012050	S.COI LQW18AN24NG00D	T	15.1/11.4
R1	7030005240	S.RES ERJ2GEJ 473 X (47K)	T	11.6/3.8
R2	7030007290	S.RES ERJ2GEJ 222 X (2.2K)	T	12.5/3.8
R3	7030005040	S.RES ERJ2GEJ 472 X (4.7K)	T	13.1/1.2
R82	7030005210	S.RES ERJ2GEJ 822 X (8.2K)	T	4.9/16.4
R83	7030005050	S.RES ERJ2GEJ 103 X (10K)	T	5.0/3.6
R89	7030007290	S.RES ERJ2GEJ 222 X (2.2K)	T	3.3/16.4
R100	7030007320	S.RES ERJ2GEJ 225 X (2.2M)	T	8.0/5.2
R101	7030008270	S.RES RR0510P-104-D (100K)	T	8.3/4.0
R114	7030005820	S.RES RR0510P-103-D (10K)	T	16.8/1.2
R117	7030011000	S.RES RR0510P-392-D (3.9K)	T	14.2/6.3
R120	7030008280	S.RES ERJ2GEJ 271 X (270)	T	17.7/1.2
R126	7030005710	S.RES ERJ2GEJ 121 X (120)	T	18.0/6.7
R200	7030004980	S.RES ERJ2GEJ 101 X (100)	T	13.6/8.6
R201	7030005720	S.RES ERJ2GEJ 563 X (56K)	T	16.7/7.3
R202	7030010040	S.RES ERJ2GEJ-JPW	T	12.0/9.5
R203	7030004980	S.RES ERJ2GEJ 101 X (100)	T	10.4/9.5
R204	7030010040	S.RES ERJ2GEJ-JPW	T	10.6/8.6
R205	7030004970	S.RES ERJ2GEJ 470 X (47)	T	8.4/7.6
R206	7030005060	S.RES ERJ2GEJ 333 X (33K)	T	7.1/7.6
R207	7030004990	S.RES ERJ2GEJ 221 X (220)	T	8.8/9.5
R208	7030005070	S.RES ERJ2GEJ 683 X (68K)	T	7.2/10.8
R348	7030007320	S.RES ERJ2GEJ 225 X (2.2M)	T	7.9/16.4
R352	7030008270	S.RES RR0510P-104-D (100K)	T	7.9/15.5
R356	7030005240	S.RES ERJ2GEJ 473 X (47K)	T	11.6/13.6
R358	7030005120	S.RES ERJ2GEJ 102 X (1K)	T	12.5/13.6
R360	7030005040	S.RES ERJ2GEJ 472 X (4.7K)	T	13.1/10.9
R363	7030005820	S.RES RR0510P-103-D (10K)	T	16.5/11.2
R366	7030006010	S.RES RR0510P-472-D (4.7K)	T	15.9/15.9
R371	7030004970	S.RES ERJ2GEJ 470 X (47)	T	12.4/16.0
R372	7030008280	S.RES ERJ2GEJ 271 X (270)	T	16.5/10.3
R375	7030005710	S.RES ERJ2GEJ 121 X (120)	T	18.0/9.1
R376	7030005030	S.RES ERJ2GEJ 152 X (1.5K)	T	5.4/4.8
C1	4030016790	S.CER C1005 JB 1E 103K-T	T	14.0/2.1
C2	4030016790	S.CER C1005 JB 1E 103K-T	T	11.6/1.2
C3	4030017460	S.CER C1005 JB 1H 102K-T	T	5.1/1.5
C85	4030017460	S.CER C1005 JB 1H 102K-T	T	4.2/1.5
C98	4030016930	S.CER C1005 JB 1A 104K-T	T	6.6/4.0
C101	4030017460	S.CER C1005 JB 1H 102K-T	T	6.7/4.9
C103	4030017520	S.CER C1005 CH 1H 0R3B-T	T	9.5/3.7
C108	4030017520	S.CER C1005 CH 1H 0R3B-T	T	9.2/4.9
C118	4030017460	S.CER C1005 JB 1H 102K-T	T	15.1/6.3
C119	4030007010	S.CER C1608 CH 1H 100D-T	T	14.3/4.9
C124	4030007030	S.CER C1608 CH 1H 150J-T	T	17.0/3.7
C125	4030007010	S.CER C1608 CH 1H 100D-T	T	17.0/2.5
C126	4030017460	S.CER C1005 JB 1H 102K-T	T	11.5/6.3
C132	4030017540	S.CER C1005 CH 1H R75B-T	T	18.0/5.1
C200	4030017460	S.CER C1005 JB 1H 102K-T	T	12.4/8.3
C201	4030017400	S.CER C1005 CH 1H 220J-T	T	13.6/9.5
C202	4030017460	S.CER C1005 JB 1H 102K-T	T	8.4/11.3
C203	4030017460	S.CER C1005 JB 1H 102K-T	T	6.6/6.4
C204	4030017460	S.CER C1005 JB 1H 102K-T	T	9.0/8.6
C205	4030017460	S.CER C1005 JB 1H 102K-T	T	3.8/7.0
C206	4030017460	S.CER C1005 JB 1H 102K-T	T	6.4/9.5
C207	4030017650	S.CER C1005 CH 1H 270J-T	T	8.7/10.4
C208	4030017460	S.CER C1005 JB 1H 102K-T	T	3.0/10.5
C209	4030017570	S.CER C1005 CH 1H 040B-T	T	3.9/14.0
C210	4030017570	S.CER C1005 CH 1H 040B-T	T	3.0/14.0
C211	4030017350	S.CER C1005 CH 1H 020B-T	T	3.4/12.8
C214	4030017460	S.CER C1005 JB 1H 102K-T	T	6.0/1.5
C341	4030016930	S.CER C1005 JB 1A 104K-T	T	5.4/15.4
C345	4030017460	S.CER C1005 JB 1H 102K-T	T	6.6/16.1
C349	4030017460	S.CER C1005 JB 1H 102K-T	T	10.2/16.0
C350	4030017460	S.CER C1005 JB 1H 102K-T	T	4.8/12.9
C356	4030017520	S.CER C1005 CH 1H 0R3B-T	T	9.3/15.0
C361	4030019990	S.CER C1005 JB 1C 104K-T	T	12.2/10.9
C366	4030016930	S.CER C1005 JB 1A 104K-T	T	14.0/11.8
C368	4030007040	S.CER C1608 CH 1H 180J-T	T	14.3/14.7

[VCO1 UNIT]

REF NO.	PARTS NO.	DESCRIPTION	M.	H/V LOCATION
C374	4030017460	S.CER C1005 JB 1H 102K-T	T	11.5/16.0
C375	4030007060	S.CER C1608 CH 1H 270J-T	T	17.0/13.5
C376	4030007080	S.CER C1608 CH 1H 390J-T	T	17.0/12.3
C386	4030017340	S.CER C1005 CH 1H 010B-T	T	18.0/10.7
C389	4030017460	S.CER C1005 JB 1H 102K-T	T	13.3/16.0
C390	4030017460	S.CER C1005 JB 1H 102K-T	T	5.7/12.9
C391	4030017460	S.CER C1005 JB 1H 102K-T	T	15.0/7.8
J1	6510029530	S.CON AXK6F12347YG	B	5.0/8.9

Eqv.= This component is equivalent to the REF No. component listed above, and may be substituted on parts orders and repairs.

M.=Mounted side (T: Mounted on the Top side, B: Mounted on the Bottom side)
S.=Surface mount

[VCO2 UNIT]

REF NO.	PARTS NO.	DESCRIPTION		M.	H/V LOCATION
Q1	1590004070	S.TRA	LDTC144EET1G <SLVJ>	T	7.5/1.3
Q27	1530003260	S.TRA	2SC5006-T1	T	16.6/5.4
Q200	1530003260	S.TRA	2SC5006-T1	T	16.4/8.9
Q201	1530003260	S.TRA	2SC5006-T1	T	5.4/7.8
Q202	1530003260	S.TRA	2SC5006-T1	T	5.6/11.0
Q308	1590004090	S.TRA	LDTC114YET1G <SLVJ>	T	7.3/12.9
Q311	1530003260	S.TRA	2SC5006-T1	T	17.3/15.3
D1	1750001700	S.DIO	HSC277TRF-E	T	12.3/2.5
D10	1750001610	S.VAR	HVC365TRF-E	T	9.3/1.6
D11	1750000721	S.VAR	HVC375BTRF-E	T	10.5/4.1
D12	1750000711	S.VAR	HVC350BTRF-E	T	10.5/1.6
D53	1750002540	S.DIO	LRB520G-30T1G <SLVJ>	T	8.8/6.7
D103	1750002540	S.DIO	LRB520G-30T1G <SLVJ>	T	10.5/6.5
D304	1750001610	S.VAR	HVC365TRF-E	T	10.7/11.4
D305	1750001610	S.VAR	HVC365TRF-E	T	10.5/13.9
D306	1750001610	S.VAR	HVC365TRF-E	T	9.3/12.9
D308	1750001700	S.DIO	HSC277TRF-E	T	12.4/12.3
L3	6200010630	S.COI	LQW18AN8N2D00D	T	15.0/1.7
L4	6200012170	S.COI	MLG1608S R18J-T	T	7.6/2.9
L5	6200010630	S.COI	LQW18AN8N2D00D	T	14.3/3.7
L6	6200014760	S.COI	MLK1005SR22JT	T	12.4/6.3
L200	6200014760	S.COI	MLK1005SR22JT	T	5.0/6.0
L201	6200013750	S.COI	MLK1005SR10JT	T	4.8/9.5
L202	6200013860	S.COI	MLK1005S12NJT	T	3.4/11.9
L203	6200007931	S.COI	ELJRF 12NJFB	T	3.4/4.8
L204	6200013800	S.COI	MLK1005S39NJT	T	14.8/9.0
L302	6200012170	S.COI	MLG1608S R18J-T	T	7.5/14.5
L306	6200009280	S.COI	LQW18AN27NG00D (LQW1608A27NG00)	T	14.3/13.5
L307	6200012050	S.COI	LQW18AN24NG00D	T	15.1/11.4
R1	7030005240	S.RES	ERJ2GEJ 473 X (47K)	T	11.6/3.8
R2	7030007290	S.RES	ERJ2GEJ 222 X (2.2K)	T	12.5/3.8
R3	7030005040	S.RES	ERJ2GEJ 472 X (4.7K)	T	13.1/1.2
R82	7030005210	S.RES	ERJ2GEJ 822 X (8.2K)	T	4.9/16.4
R83	7030005050	S.RES	ERJ2GEJ 103 X (10K)	T	5.0/3.6
R89	7030007290	S.RES	ERJ2GEJ 222 X (2.2K)	T	3.3/16.4
R100	7030007320	S.RES	ERJ2GEJ 225 X (2.2M)	T	8.0/5.2
R101	7030008270	S.RES	RR0510P-104-D (100K)	T	8.3/4.0
R114	7030005820	S.RES	RR0510P-103-D (10K)	T	16.8/1.2
R117	7030011000	S.RES	RR0510P-392-D (3.9K)	T	14.2/6.3
R120	7030008280	S.RES	ERJ2GEJ 271 X (270)	T	17.7/1.2
R126	7030005710	S.RES	ERJ2GEJ 121 X (120)	T	18.0/6.7
R200	7030004980	S.RES	ERJ2GEJ 101 X (100)	T	13.6/8.6
R201	7030005720	S.RES	ERJ2GEJ 563 X (56K)	T	16.7/7.3
R202	7030010040	S.RES	ERJ2GEJ-JPW	T	12.0/9.5
R203	7030004980	S.RES	ERJ2GEJ 101 X (100)	T	10.4/9.5
R204	7030010040	S.RES	ERJ2GEJ-JPW	T	10.6/8.6
R205	7030004970	S.RES	ERJ2GEJ 470 X (47)	T	8.4/7.6
R206	7030005060	S.RES	ERJ2GEJ 333 X (33K)	T	7.1/7.6
R207	7030004990	S.RES	ERJ2GEJ 221 X (220)	T	8.8/9.5
R208	7030005070	S.RES	ERJ2GEJ 683 X (68K)	T	7.2/10.8
R348	7030007320	S.RES	ERJ2GEJ 225 X (2.2M)	T	7.9/16.4
R352	7030008270	S.RES	RR0510P-104-D (100K)	T	7.9/15.5
R356	7030005240	S.RES	ERJ2GEJ 473 X (47K)	T	11.6/13.6
R358	7030005120	S.RES	ERJ2GEJ 102 X (1K)	T	12.5/13.6
R360	7030005040	S.RES	ERJ2GEJ 472 X (4.7K)	T	13.1/10.9
R363	7030005820	S.RES	RR0510P-103-D (10K)	T	16.5/11.2
R366	7030006010	S.RES	RR0510P-472-D (4.7K)	T	15.9/15.9
R371	7030004970	S.RES	ERJ2GEJ 470 X (47)	T	12.4/16.0
R372	7030008280	S.RES	ERJ2GEJ 271 X (270)	T	16.5/10.3
R375	7030005710	S.RES	ERJ2GEJ 121 X (120)	T	18.0/9.1
R376	7030005030	S.RES	ERJ2GEJ 152 X (1.5K)	T	5.4/4.8
C1	4030016790	S.CER	C1005 JB 1E 103K-T	T	14.0/2.1
C2	4030016790	S.CER	C1005 JB 1E 103K-T	T	11.6/1.2
C3	4030017460	S.CER	C1005 JB 1H 102K-T	T	5.1/1.5
C85	4030017460	S.CER	C1005 JB 1H 102K-T	T	4.2/1.5
C98	4030016930	S.CER	C1005 JB 1A 104K-T	T	6.6/4.0
C101	4030017460	S.CER	C1005 JB 1H 102K-T	T	6.7/4.9
C103	4030017520	S.CER	C1005 CH 1H 0R3B-T	T	9.5/3.7
C108	4030017520	S.CER	C1005 CH 1H 0R3B-T	T	9.2/4.9
C118	4030017460	S.CER	C1005 JB 1H 102K-T	T	15.1/6.3
C119	4030007010	S.CER	C1608 CH 1H 100D-T	T	14.3/4.9
C124	4030007030	S.CER	C1608 CH 1H 150J-T	T	17.0/3.7
C125	4030007010	S.CER	C1608 CH 1H 100D-T	T	17.0/2.5
C126	4030017460	S.CER	C1005 JB 1H 102K-T	T	11.5/6.3
C132	4030017540	S.CER	C1005 CH 1H R75B-T	T	18.0/5.1
C200	4030017460	S.CER	C1005 JB 1H 102K-T	T	12.4/8.3
C201	4030017400	S.CER	C1005 CH 1H 220J-T	T	13.6/9.5
C202	4030017460	S.CER	C1005 JB 1H 102K-T	T	8.4/11.3
C203	4030017460	S.CER	C1005 JB 1H 102K-T	T	6.6/6.4
C204	4030017460	S.CER	C1005 JB 1H 102K-T	T	9.0/8.6
C205	4030017460	S.CER	C1005 JB 1H 102K-T	T	3.8/7.0
C206	4030017460	S.CER	C1005 JB 1H 102K-T	T	6.4/9.5
C207	4030017650	S.CER	C1005 CH 1H 270J-T	T	8.7/10.4
C208	4030017460	S.CER	C1005 JB 1H 102K-T	T	3.0/10.5
C209	4030017570	S.CER	C1005 CH 1H 040B-T	T	3.9/14.0
C210	4030017570	S.CER	C1005 CH 1H 040B-T	T	3.0/14.0
C211	4030017350	S.CER	C1005 CH 1H 020B-T	T	3.4/12.8
C214	4030017460	S.CER	C1005 JB 1H 102K-T	T	6.0/1.5
C341	4030016930	S.CER	C1005 JB 1A 104K-T	T	5.4/15.4
C345	4030017460	S.CER	C1005 JB 1H 102K-T	T	6.6/16.1
C349	4030017460	S.CER	C1005 JB 1H 102K-T	T	10.2/16.0
C350	4030017460	S.CER	C1005 JB 1H 102K-T	T	4.8/12.9
C356	4030017520	S.CER	C1005 CH 1H 0R3B-T	T	9.3/15.0
C361	4030019990	S.CER	C1005 JB 1C 104K-T	T	12.2/10.9
C366	4030016930	S.CER	C1005 JB 1A 104K-T	T	14.0/11.8
C368	4030007040	S.CER	C1608 CH 1H 180J-T	T	14.3/14.7

[VCO2 UNIT]

REF NO.	PARTS NO.	DESCRIPTION		M.	H/V LOCATION
C374	4030017460	S.CER	C1005 JB 1H 102K-T	T	11.5/16.0
C375	4030007060	S.CER	C1608 CH 1H 270J-T	T	17.0/13.5
C376	4030007080	S.CER	C1608 CH 1H 390J-T	T	17.0/12.3
C386	4030017340	S.CER	C1005 CH 1H 010B-T	T	18.0/10.7
C389	4030017460	S.CER	C1005 JB 1H 102K-T	T	13.3/16.0
C390	4030017460	S.CER	C1005 JB 1H 102K-T	T	5.7/12.9
C391	4030017460	S.CER	C1005 JB 1H 102K-T	T	15.0/7.8
J1	6510029530	S.CON	AXK6F12347YG	B	5.0/8.9

Eqv.= This component is equivalent to the REF No. component listed above, and may be substituted on parts orders and repairs.

M.=Mounted side (T: Mounted on the Top side, B: Mounted on the Bottom side)
S.=Surface mount

[LOGIC UNIT]

REF NO.	PARTS NO.	DESCRIPTION	M.	H/V LOCATION
IC2	1120003020	S.IC MAX3221IPWR	B	53.0/45.2
IC3	1140015870	S.IC M24M01-RMN6TP	B	6.4/32.5
IC4	1130015740	S.IC S-35390A-I8T1G	B	92.2/12.7
IC5	1140016250	S.IC R5F56107WNBG	B	49.2/12.6
IC7	1140015870	S.IC M24M01-RMN6TP	B	36.5/7.0
IC8	1130014260	S.IC SN74LVC2GU04DCKR	B	72.7/22.9
IC9	1180003990	S.REG XC6216D332PR-G	B	72.1/18.7
IC10	6910022370	S.DC TPS62400DRCR	B	83.7/9.0
IC11	1180003970	S.REG XC6221A332NR-G	B	26.3/7.3
IC12	1180003980	S.REG XC6221A332MR-G	B	74.6/29.8
IC13	1180003970	S.REG XC6221A332NR-G	T	78.5/7.2
IC16	1130009981	S.IC TC7W53FK(TE85LF)	B	23.8/41.3
IC17	1110008210	S.IC OPA356AIDBVR	B	29.4/18.1
IC18	1140016370	S.IC TMS320C5517AZCHA20 <FE>	B	18.9/21.9
IC19	1190003520	S.IC ADS7866IDBVR <FE>	B	19.4/32.1
IC20	1130015620	S.IC EN25Q40-100GIP <MSK>	B	13.9/41.4
IC21	1130015820	S.IC SN74AUP1T17DCKR	B	7.3/9.4
IC22	1110007820	S.IC S-80929CNPF-G8ZTFG	B	29.0/1.6
IC24	1110008040	S.IC S-80942CLPF-G7C-TFG	B	81.0/15.9
IC25	1110007920	S.IC SC-1445-E2	B	31.0/27.7
IC300	1110006470	S.IC LMV324IPWR	B	52.6/37.0
IC350	1110006740	S.IC LMV358IPWR	B	52.6/30.8
IC351	1130007021	S.IC TC7S66FU(TE85LF)	B	46.4/30.3
IC390	1130015760	S.IC TC74VHC4066AFK(EK)	B	42.9/33.2
Q7	1590004070	S.TRA LDTC144EET1G <SLVJ>	B	60.5/17.7
Q8	1590004070	S.TRA LDTC144EET1G <SLVJ>	T	5.7/11.4
Q9	1590004070	S.TRA LDTC144EET1G <SLVJ>	T	5.7/9.4
Q11	1510001100	S.TRA 2SA1832-GR(TE85RF)	B	75.1/22.4
Q12	1530003990	S.TRA 2SC4738-BL(TE85LF)	B	68.7/37.5
Q13	1530004000	S.TRA 2SC4738-GR(TE85LF)	B	72.4/27.2
Q19	1590004050	S.TRA LDTA144EET1G <SLVJ>	B	35.9/14.9
Q20	1510001100	S.TRA 2SA1832-GR(TE85RF)	B	91.1/36.8
Q21	1590004100	S.TRA LDTC144TET1G <SLVJ>	B	82.2/42.6
Q23	1560001730	S.FET RUE002N02 TL	B	30.3/46.4
Q24	1590004250	S.TRA DRC9143Z0L	B	25.0/47.3
Q25	1560001360	S.FET 2SK3019 TL	B	41.1/19.2
Q26	1590004070	S.TRA LDTC144EET1G <SLVJ>	B	82.9/15.6
Q27	1590004050	S.TRA LDTA144EET1G <SLVJ>	B	78.2/16.8
Q29	1550000370	S.FET RSM002P03T2L	B	75.7/16.6
Q300	1590004070	S.TRA LDTC144EET1G <SLVJ>	B	46.7/41.7
Q301	1590004060	S.TRA LDTC114EET1G <SLVJ>	B	47.3/33.5
Q302	1590004070	S.TRA LDTC144EET1G <SLVJ>	B	49.8/41.7
Q330	1590004390	S.TRA DMG504010R	B	65.4/32.6
Q350	1590004060	S.TRA LDTC114EET1G <SLVJ>	B	51.2/26.3
Q360	1590004610	S.TRA DMA561050R	B	64.1/21.1
Q370	1590004390	S.TRA DMG504010R	B	63.4/26.0
Q380	1590004070	S.TRA LDTC144EET1G <SLVJ>	B	6.1/13.7
Q390	1590004070	S.TRA LDTC144EET1G <SLVJ>	T	43.9/34.9
D1	1750001810	S.DIO L1SS400T1G <SLVJ>	T	50.6/33.4
D2	1750001810	S.DIO L1SS400T1G <SLVJ>	T	63.4/33.1
D3	1750001810	S.DIO L1SS400T1G <SLVJ>	T	65.2/18.7
D4	1750001810	S.DIO L1SS400T1G <SLVJ>	T	63.4/16.3
D5	1750001810	S.DIO L1SS400T1G <SLVJ> [EUR]	B	43.2/20.1
	1750001810	S.DIO L1SS400T1G <SLVJ> [UK]		
	1750001810	S.DIO L1SS400T1G <SLVJ> [USA]		
	1750001810	S.DIO L1SS400T1G <SLVJ> [KOR]		
	1750001810	S.DIO L1SS400T1G <SLVJ> [EXP]		
	1750001810	S.DIO L1SS400T1G <SLVJ> [EXP-01]		
D6	1750001810	S.DIO L1SS400T1G <SLVJ> [UK]	B	43.2/22.5
	1750001810	S.DIO L1SS400T1G <SLVJ> [ITR]		
	1750001810	S.DIO L1SS400T1G <SLVJ> [EXP-01]		
D7	1750001810	S.DIO L1SS400T1G <SLVJ> [EUR]	B	43.2/23.7
	1750001810	S.DIO L1SS400T1G <SLVJ> [ITR]		
	1750001810	S.DIO L1SS400T1G <SLVJ> [KOR]		
	1750001810	S.DIO L1SS400T1G <SLVJ> [EXP-01]		
D8	1750001810	S.DIO L1SS400T1G <SLVJ> [EUR]	B	43.2/21.3
	1750001810	S.DIO L1SS400T1G <SLVJ> [ITR]		
	1750001810	S.DIO L1SS400T1G <SLVJ> [EXP]		
	1750001810	S.DIO L1SS400T1G <SLVJ> [AUS]		
D9	1750001810	S.DIO L1SS400T1G <SLVJ> [EUR]	T	63.4/17.9
	1750001810	S.DIO L1SS400T1G <SLVJ> [ITR]		
	1750001810	S.DIO L1SS400T1G <SLVJ> [KOR]		
D10	1750001810	S.DIO L1SS400T1G <SLVJ> [EUR]	T	50.6/32.2
	1750001810	S.DIO L1SS400T1G <SLVJ> [UK]		
	1750001810	S.DIO L1SS400T1G <SLVJ> [ITR]		
	1750001810	S.DIO L1SS400T1G <SLVJ> [USA]		
	1750001810	S.DIO L1SS400T1G <SLVJ> [KOR]		
	1750001810	S.DIO L1SS400T1G <SLVJ> [EXP-01]		
	1750001810	S.DIO L1SS400T1G <SLVJ> [AUS]		
D11	1750001810	S.DIO L1SS400T1G <SLVJ> [EUR]	T	63.4/31.6
	1750001810	S.DIO L1SS400T1G <SLVJ> [UK]		
	1750001810	S.DIO L1SS400T1G <SLVJ> [ITR]		
	1750001810	S.DIO L1SS400T1G <SLVJ> [USA]		
	1750001810	S.DIO L1SS400T1G <SLVJ> [KOR]		
	1750001810	S.DIO L1SS400T1G <SLVJ> [EXP-01]		
	1750001810	S.DIO L1SS400T1G <SLVJ> [AUS]		
D13	1750002540	S.DIO LRB520G-30T1G <SLVJ>	B	51.9/23.7
D14	1750002540	S.DIO LRB520G-30T1G <SLVJ>	B	52.9/23.7
D15	1750002540	S.DIO LRB520G-30T1G <SLVJ>	B	56.1/22.1
D16	1750001810	S.DIO L1SS400T1G <SLVJ>	B	91.8/10.3
D17	1750002540	S.DIO LRB520G-30T1G <SLVJ>	B	55.0/24.0
D18	1750000771	S.VAR HVC376BTRF-E	B	57.5/8.2
D20	1750001810	S.DIO L1SS400T1G <SLVJ>	B	75.5/18.7
D21	1750001810	S.DIO L1SS400T1G <SLVJ>	B	74.0/25.9
D22	1750001970	S.ZEN DZ2J082M0L	B	61.3/39.5
D23	1750002020	S.DIO DA2S10100L	B	70.0/26.7
D24	1750001810	S.DIO L1SS400T1G <SLVJ>	B	59.8/39.1
D26	1750002540	S.DIO LRB520G-30T1G <SLVJ>	B	76.3/15.1
D31	1790001850	S.VAR VC040205X150WP	B	85.2/42.2
D33	1790001960	S.VAR VC060303A100RP	T	28.7/48.0
D34	1750002540	S.DIO LRB520G-30T1G <SLVJ>	B	39.4/19.3

[LOGIC UNIT]

REF NO.	PARTS NO.	DESCRIPTION	M.	H/V LOCATION
D35	1750002540	S.DIO LRB520G-30T1G <SLVJ>	B	39.4/16.1
D40	1790001960	S.VAR VC060303A100RP	T	44.3/40.0
D180	1750001810	S.DIO L1SS400T1G <SLVJ>	B	29.5/36.5
D181	1750001810	S.DIO L1SS400T1G <SLVJ>	B	29.5/37.7
X1	6050013250	S.XTA CR-925 (NX3215SA 32.768 kHz)	B	92.5/15.4
X2	6050013260	S.XTA CR-924 TAS-3225H 12.288 MHz	B	58.5/12.5
X3	6050013170	S.XTA CR-914 TTS18VSE-A11 12.288 MHz	B	34.9/17.8
L1	6200014260	S.COI LQM2MPN2R2NG0L	B	87.5/7.1
L2	6200014260	S.COI LQM2MPN2R2NG0L	B	80.2/7.0
L3	6200014260	S.COI LQM2MPN2R2NG0L	B	80.2/11.3
L4	6200013920	S.COI MLK1005S3N9ST	B	28.5/22.9
R2	7030005090	S.RES ERJ2GEJ 104 X (100K)	B	5.3/9.7
R4	7030005090	S.RES ERJ2GEJ 104 X (100K)	B	8.7/23.2
R5	7030005120	S.RES ERJ2GEJ 102 X (1K)	B	41.6/16.8
R6	7030005090	S.RES ERJ2GEJ 104 X (100K)	B	7.7/6.0
R7	7030010040	S.RES ERJ2GEJ-JPW	B	4.9/29.2
R8	7030005240	S.RES ERJ2GEJ 473 X (47K)	T	75.3/4.7
R9	7030005090	S.RES ERJ2GEJ 104 X (100K)	B	8.0/21.0
R10	7030005240	S.RES ERJ2GEJ 473 X (47K)	T	75.1/7.7
R11	7030005240	S.RES ERJ2GEJ 473 X (47K)	T	75.3/5.6
R12	7030005240	S.RES ERJ2GEJ 473 X (47K)	T	75.3/6.5
R13	7030005240	S.RES ERJ2GEJ 473 X (47K)	T	75.3/3.7
R14	7030004980	S.RES ERJ2GEJ 101 X (100)	B	61.1/45.0
R15	7030010040	S.RES ERJ2GEJ-JPW	B	8.9/21.0
R16	7030005570	S.RES ERJ2GEJ 820 X (82)	T	18.5/48.1
R17	7030009280	S.RES ERJ2GEJ 391 X	T	43.9/9.7
R18	7030009160	S.RES ERJ2GEJ 181 X (180)	B	28.5/47.7
R19	7030005570	S.RES ERJ2GEJ 820 X (82)	T	30.4/48.2
R20	7030005090	S.RES ERJ2GEJ 104 X (100K)	B	55.2/22.7
R21	7030004980	S.RES ERJ2GEJ 101 X (100)	B	61.1/45.9
R22	7030005570	S.RES ERJ2GEJ 820 X (82)	T	27.0/48.1
R23	7030009280	S.RES ERJ2GEJ 391 X	T	43.9/8.8
R24	7030007270	S.RES ERJ2GEJ 151 X (150)	B	26.7/48.1
R25	7030009280	S.RES ERJ2GEJ 391 X	T	43.9/42.7
R26	7030005120	S.RES ERJ2GEJ 102 X (1K)	B	59.6/23.8
R27	7030009280	S.RES ERJ2GEJ 391 X	T	44.0/41.7
R28	7030005120	S.RES ERJ2GEJ 102 X (1K)	B	54.3/22.7
R29	7030005090	S.RES ERJ2GEJ 104 X (100K)	B	48.3/43.4
R30	7030005090	S.RES ERJ2GEJ 104 X (100K)	B	48.3/44.3
R31	7030005120	S.RES ERJ2GEJ 102 X (1K)	B	53.3/21.3
R32	7030005120	S.RES ERJ2GEJ 102 X (1K)	B	63.5/17.9
R33	7030007290	S.RES ERJ2GEJ 222 X (2.2K)	B	9.7/36.2
R34	7030007290	S.RES ERJ2GEJ 222 X (2.2K)	B	8.6/36.2
R35	7030005240	S.RES ERJ2GEJ 473 X (47K)	B	56.8/19.1
R36	7030005090	S.RES ERJ2GEJ 104 X (100K)	B	48.2/22.9
R37	7030005120	S.RES ERJ2GEJ 102 X (1K)	B	50.6/22.5
R38	7030005120	S.RES ERJ2GEJ 102 X (1K)	B	46.1/23.0
R39	7030005120	S.RES ERJ2GEJ 102 X (1K)	B	59.5/21.0
R40	7030005120	S.RES ERJ2GEJ 102 X (1K)	T	43.9/22.5
R41	7030005120	S.RES ERJ2GEJ 102 X (1K)	B	48.2/23.8
R42	7030005120	S.RES ERJ2GEJ 102 X (1K)	B	47.7/20.4
R43	7030005120	S.RES ERJ2GEJ 102 X (1K)	B	49.4/22.4
R44	7030005120	S.RES ERJ2GEJ 102 X (1K)	B	50.2/20.4
R45	7030005240	S.RES ERJ2GEJ 473 X (47K)	B	49.0/20.9
R46	7030005160	S.RES ERJ2GEJ 105 X (1M)	B	46.5/20.9
R47	7030005050	S.RES ERJ2GEJ 103 X (10K)	T	15.1/2.3
R48	7030005050	S.RES ERJ2GEJ 103 X (10K)	T	29.2/1.9
R49	7030005050	S.RES ERJ2GEJ 103 X (10K)	T	20.1/2.3
R50	7030005120	S.RES ERJ2GEJ 102 X (1K)	B	51.5/21.3
R51	7030005050	S.RES ERJ2GEJ 103 X (10K)	T	17.6/2.3
R52	7030005050	S.RES ERJ2GEJ 103 X (10K)	T	12.5/2.3
R53	7030005050	S.RES ERJ2GEJ 103 X (10K)	B	88.1/16.0
R54	7030005090	S.RES ERJ2GEJ 104 X (100K)	B	63.1/16.7
R55	7030005050	S.RES ERJ2GEJ 103 X (10K)	T	25.9/2.3
R56	7030005090	S.RES ERJ2GEJ 104 X (100K)	T	88.2/8.6
R57	7030005050	S.RES ERJ2GEJ 103 X (10K)	T	22.5/2.3
R58	7030005050	S.RES ERJ2GEJ 103 X (10K)	T	28.2/1.9
R59	7030005040	S.RES ERJ2GEJ 472 X (4.7K)	B	90.2/10.8
R60	7030005240	S.RES ERJ2GEJ 473 X (47K)	B	90.1/12.1
R61	7030005240	S.RES ERJ2GEJ 473 X (47K)	B	90.1/13.0
R62	7030005120	S.RES ERJ2GEJ 102 X (1K)	B	88.1/15.1
R63	7030005120	S.RES ERJ2GEJ 102 X (1K)	B	56.5/24.4
R64	7030005120	S.RES ERJ2GEJ 102 X (1K)	B	55.7/25.9
R65	7030008260	S.RES RR0510P-393-D (39K)	B	58.5/18.2
R66	7030005090	S.RES ERJ2GEJ 104 X (100K)	B	57.3/25.9
R67	7030005160	S.RES ERJ2GEJ 105 X (1M)	B	60.5/23.0
R68	7030008410	S.RES ERJ2GEJ 392 X (3.9K)	B	56.8/18.2
R69	7030005050	S.RES ERJ2GEJ 103 X (10K)	B	29.0/2.9
R70	7510001770	S.THE NTCG10 4LH 473JT	T	43.9/24.3
R71	7030010080	S.RES ERJ2RHD 1003X (100K)	T	43.9/23.4
R72	7030007270	S.RES ERJ2GEJ 151 X (150)	T	5.4/7.1
R73	7030007280	S.RES ERJ2GEJ 331 X (330)	T	5.4/8.0
R74	7030005530	S.RES ERJ2GEJ 100 X (10)	B	56.8/14.9
R75	7030005160	S.RES ERJ2GEJ 105 X (1M)	B	56.5/13.0
R76	7030005090	S.RES ERJ2GEJ 104 X (100K)	B	57.1/7.1
R77	7030008010	S.RES ERJ2GEJ 123 X (12K)	B	56.0/4.7
R79	7030005240	S.RES ERJ2GEJ 473 X (47K)	T	43.9/12.6
R80	7030005240	S.RES ERJ2GEJ 473 X (47K)	B	41.6/13.8
R84	7030004980	S.RES ERJ2GEJ 101 X (100)	B	53.8/5.1
R88	7030005090	S.RES ERJ2GEJ 104 X (100K)	B	70.8/22.9
R90	7030005090	S.RES ERJ2GEJ 104 X (100K)	B	69.0/22.9
R94	7030005240	S.RES ERJ2GEJ 473 X (47K)	B	38.3/2.4
R95	7030005040	S.RES ERJ2GEJ 472 X (4.7K)	B	38.3/3.3
R97	7030005240	S.RES ERJ2GEJ 473 X (47K)	B	76.0/21.0
R98	7030005090	S.RES ERJ2GEJ 104 X (100K)	B	70.8/35.6
R99	7030005120	S.RES ERJ2GEJ 102 X (1K)	B	70.8/36.5
R100	7030005820	S.RES RR0510P-103-D (10K)	B	75.1/24.0
R101	7030011880	S.RES RR0510P-183-D (18K)	B	72.9/25.5

Eqv.= This component is equivalent to the REF No. component listed above, and may be substituted on parts orders and repairs.

M.=Mounted side (T: Mounted on the Top side, B: Mounted on the Bottom side)
S.=Surface mount

[LOGIC UNIT]

REF NO.	PARTS NO.	DESCRIPTION	M.	H/V LOCATION
R102	7030005240	S.RES ERJ2GEJ 473 X (47K)	B	67.0/37.7
R103	7030005050	S.RES ERJ2GEJ 103 X (10K)	B	63.9/37.3
R104	7030008010	S.RES ERJ2GEJ 123 X (12K)	B	72.0/25.5
R105	7030005120	S.RES ERJ2GEJ 102 X (1K)	B	71.0/25.5
R107	7030010010	S.RES ERJ2RKF 334 X (330K)	B	59.8/41.2
R108	7030007610	S.RES RR0510P-683-D (68K)	B	58.4/41.5
R109	7030005230	S.RES ERJ2GEJ 334 X (330K)	B	28.7/42.1
R111	7030005240	S.RES ERJ2GEJ 473 X (47K)	B	27.5/45.1
R112	7030005040	S.RES ERJ2GEJ 472 X (4.7K)	B	27.0/43.9
R113	7030005010	S.RES ERJ2GEJ 681 X (680)	B	28.7/43.0
R114	7030011680	S.RES ERJ2RKF 2703 (270K)	B	85.1/11.8
R115	7030012270	S.RES ERJ2RKD 1203X (120K)	B	86.0/6.5
R116	7030012270	S.RES ERJ2RKD 1203X (120K)	B	85.5/5.3
R117	7030012270	S.RES ERJ2RKD 1203X (120K)	B	84.9/6.5
R118	7030005160	S.RES ERJ2GEJ 105 X (1M)	B	25.4/43.4
R119	7030005050	S.RES ERJ2GEJ 103 X (10K)	B	23.8/44.2
R120	7030005530	S.RES ERJ2GEJ 100 X (10)	B	16.7/31.8
R121	7030010010	S.RES ERJ2RKF 334 X (330K)	B	86.4/11.5
R122	7030008310	S.RES ERJ2GEJ 564 X (560K)	B	21.1/41.0
R124	7030005240	S.RES ERJ2GEJ 473 X (47K)	B	41.9/28.9
R125	7030005120	S.RES ERJ2GEJ 102 X (1K)	B	40.3/29.8
R126	7030005100	S.RES ERJ2GEJ 154 X (150K)	B	40.3/28.9
R127	7030005240	S.RES ERJ2GEJ 473 X (47K)	B	40.3/28.0
R128	7030004980	S.RES ERJ2GEJ 101 X (100)	B	26.1/20.0
R130	7030007340	S.RES ERJ2GEJ 153 X (15K)	B	20.5/38.4
R131	7030005110	S.RES ERJ2GEJ 224 X (220K)	B	21.7/36.8
R132	7030009160	S.RES ERJ2GEJ 181 X (180)	B	25.7/33.0
R133	7030005080	S.RES ERJ2GEJ 823 X (82K)	B	22.6/36.8
R134	7030007060	S.RES ERJ2GEJ 684X (680K)	B	26.6/33.0
R135	7030007350	S.RES ERJ2GEJ 393 X (39K)	B	23.5/36.8
R136	7030005070	S.RES ERJ2GEJ 683 X (68K)	B	24.4/36.8
R137	7030007290	S.RES ERJ2GEJ 222 X (2.2K)	B	45.1/28.0
R138	7030005080	S.RES ERJ2GEJ 823 X (82K)	B	23.5/38.5
R139	7030007350	S.RES ERJ2GEJ 393 X (39K)	B	22.1/43.3
R141	7030005220	S.RES ERJ2GEJ 223 X (22K)	B	41.1/26.2
R142	7030008010	S.RES ERJ2GEJ 123 X (12K)	B	41.1/27.1
R143	7030005050	S.RES ERJ2GEJ 103 X (10K)	B	43.3/26.7
R144	7030005090	S.RES ERJ2GEJ 104 X (100K)	B	39.8/33.6
R145	7030009290	S.RES ERJ2GEJ 562 X (5.6K)	B	39.8/34.5
R146	7030010040	S.RES ERJ2GEJ-JPW	B	48.3/28.1
R152	7030005120	S.RES ERJ2GEJ 102 X (1K)	B	41.8/37.7
R156	7030010040	S.RES ERJ2GEJ-JPW	B	22.9/9.4
R159	7030005030	S.RES ERJ2GEJ 152 X (1.5K)	B	41.4/36.4
R161	7030005090	S.RES ERJ2GEJ 104 X (100K)	B	21.4/27.9
R162	7030005120	S.RES ERJ2GEJ 102 X (1K)	B	21.9/31.7
R163	7030005090	S.RES ERJ2GEJ 104 X (100K)	B	21.9/32.6
R164	7030005090	S.RES ERJ2GEJ 104 X (100K)	B	24.9/21.5
R165	7030005120	S.RES ERJ2GEJ 102 X (1K)	B	12.9/23.8
R167	7030005090	S.RES ERJ2GEJ 104 X (100K)	B	17.8/29.5
R168	7030010040	S.RES ERJ2GEJ-JPW	B	14.6/15.8
R169	7030010040	S.RES ERJ2GEJ-JPW	B	20.0/14.2
R172	7030005090	S.RES ERJ2GEJ 104 X (100K)	B	17.3/15.8
R173	7030005090	S.RES ERJ2GEJ 104 X (100K)	B	16.4/15.8
R174	7030005050	S.RES ERJ2GEJ 103 X (10K)	B	32.5/33.6
R176	7030005090	S.RES ERJ2GEJ 104 X (100K)	B	19.6/27.9
R178	7030005120	S.RES ERJ2GEJ 102 X (1K)	B	12.9/25.4
R179	7030005240	S.RES ERJ2GEJ 473 X (47K)	B	12.9/17.4
R181	7030005160	S.RES ERJ2GEJ 105 X (1M)	B	30.9/39.8
R182	7030005120	S.RES ERJ2GEJ 102 X (1K)	B	18.7/29.5
R183	7030005120	S.RES ERJ2GEJ 102 X (1K)	B	20.5/29.5
R184	7030005100	S.RES ERJ2GEJ 154 X (150K)	B	29.2/38.9
R185	7030005120	S.RES ERJ2GEJ 102 X (1K)	B	26.3/36.8
R186	7030005050	S.RES ERJ2GEJ 103 X (10K)	B	25.8/38.0
R187	7030010040	S.RES ERJ2GEJ-JPW	B	20.0/15.8
R188	7030005090	S.RES ERJ2GEJ 104 X (100K)	B	21.4/29.5
R189	7030004980	S.RES ERJ2GEJ 101 X (100)	B	24.9/17.3
R190	7030007290	S.RES ERJ2GEJ 222 X (2.2K)	B	30.4/42.4
R191	7030010040	S.RES ERJ2GEJ-JPW	B	34.1/33.6
R192	7030007300	S.RES ERJ2GEJ 332 X (3.3K)	B	27.2/15.9
R193	7030005000	S.RES ERJ2GEJ 471 X (470)	B	31.6/16.1
R194	7030010040	S.RES ERJ2GEJ-JPW	B	26.6/18.7
R195	7030005240	S.RES ERJ2GEJ 473 X (47K)	B	31.6/18.5
R196	7030005240	S.RES ERJ2GEJ 473 X (47K)	B	29.9/20.3
R197	7030007340	S.RES ERJ2GEJ 153 X (15K)	B	35.9/32.0
R198	7030004990	S.RES ERJ2GEJ 221 X (220)	B	30.9/43.6
R199	7030005090	S.RES ERJ2GEJ 104 X (100K)	B	24.9/25.4
R200	7030005240	S.RES ERJ2GEJ 473 X (47K)	B	34.0/19.8
R204	7030004970	S.RES ERJ2GEJ 470 X (47)	B	28.1/15.6
R205	7030007340	S.RES ERJ2GEJ 153 X (15K)	B	36.4/33.2
R206	7030005090	S.RES ERJ2GEJ 104 X (100K)	B	24.9/26.3
R215	7030005090	S.RES ERJ2GEJ 104 X (100K)	B	16.9/27.9
R217	7030005240	S.RES ERJ2GEJ 473 X (47K)	B	10.4/41.5
R219	7030005240	S.RES ERJ2GEJ 473 X (47K)	B	34.4/15.3
R221	7030005090	S.RES ERJ2GEJ 104 X (100K)	B	15.1/27.9
R222	7030005240	S.RES ERJ2GEJ 473 X (47K)	B	10.4/40.5
R224	7030005240	S.RES ERJ2GEJ 473 X (47K)	B	13.4/36.8
R225	7030005040	S.RES ERJ2GEJ 472 X (4.7K)	B	14.2/27.9
R226	7030005120	S.RES ERJ2GEJ 102 X (1K)	B	32.3/13.8
R227	7030007300	S.RES ERJ2GEJ 332 X (3.3K)	B	86.9/42.2
R228	7030007290	S.RES ERJ2GEJ 222 X (2.2K)	B	90.1/38.9
R229	7030005240	S.RES ERJ2GEJ 473 X (47K)	B	14.3/36.8
R230	7030005040	S.RES ERJ2GEJ 472 X (4.7K)	B	13.3/27.9
R231	7030005120	S.RES ERJ2GEJ 102 X (1K)	B	12.9/22.0
R232	7030005050	S.RES ERJ2GEJ 103 X (10K)	B	91.3/38.4
R233	7030005120	S.RES ERJ2GEJ 102 X (1K)	B	12.9/21.1
R234	7030005110	S.RES ERJ2GEJ 224 X (220K)	B	92.1/34.9
R235	7030005050	S.RES ERJ2GEJ 103 X (10K)	B	12.9/22.9
R236	7030005090	S.RES ERJ2GEJ 104 X (100K)	B	16.0/27.9
R237	7030010040	S.RES ERJ2GEJ-JPW	B	86.9/44.0
R238	7030005090	S.RES ERJ2GEJ 104 X (100K)	B	20.5/27.9
R239	7030007290	S.RES ERJ2GEJ 222 X (2.2K)	B	86.9/43.1
R240	7030005040	S.RES ERJ2GEJ 472 X (4.7K)	B	17.8/27.9
R241	7030005000	S.RES ERJ2GEJ 471 X (470)	B	93.6/34.3
R242	7030005220	S.RES ERJ2GEJ 223 X (22K)	B	85.2/43.1
R244	7030007320	S.RES ERJ2GEJ 225 X (2.2M)	B	41.2/20.6

[LOGIC UNIT]

REF NO.	PARTS NO.	DESCRIPTION	M.	H/V LOCATION
R246	7030005090	S.RES ERJ2GEJ 104 X (100K)	B	15.5/15.8
R247	7030005090	S.RES ERJ2GEJ 104 X (100K)	B	18.7/27.9
R248	7030005090	S.RES ERJ2GEJ 104 X (100K)	B	22.3/27.9
R249	7030005090	S.RES ERJ2GEJ 104 X (100K)	B	24.9/23.4
R250	7030005090	S.RES ERJ2GEJ 104 X (100K)	B	24.9/22.5
R251	7030005090	S.RES ERJ2GEJ 104 X (100K)	B	24.9/24.3
R254	7030005240	S.RES ERJ2GEJ 473 X (47K)	B	78.8/9.0
R255	7030010040	S.RES ERJ2GEJ-JPW	B	66.6/17.2
R260	7030005090	S.RES ERJ2GEJ 104 X (100K)	B	24.9/28.1
R261	7030005090	S.RES ERJ2GEJ 104 X (100K)	B	25.3/31.4
R262	7030005090	S.RES ERJ2GEJ 104 X (100K)	B	24.9/30.1
R263	7030005090	S.RES ERJ2GEJ 104 X (100K)	B	23.7/29.5
R264	7030005090	S.RES ERJ2GEJ 104 X (100K)	B	9.1/11.1
R265	7030005090	S.RES ERJ2GEJ 104 X (100K)	B	21.8/15.8
R266	7030005090	S.RES ERJ2GEJ 104 X (100K)	B	14.6/14.2
R267	7030005090	S.RES ERJ2GEJ 104 X (100K)	B	21.8/14.2
R268	7030005090	S.RES ERJ2GEJ 104 X (100K)	B	15.5/14.2
R269	7030010040	S.RES ERJ2GEJ-JPW	B	24.9/20.6
R270	7030005120	S.RES ERJ2GEJ 102 X (1K)	B	12.9/19.3
R271	7030005090	S.RES ERJ2GEJ 104 X (100K)	B	12.9/18.3
R272	7030005120	S.RES ERJ2GEJ 102 X (1K)	B	12.9/20.2
R273	7030012260	S.RES ERJ2RKD 4703X (470K)	B	40.4/16.3
R274	7030012260	S.RES ERJ2RKD 4703X (470K)	B	40.0/17.7
R278	7030008310	S.RES ERJ2GEJ 564 X (560K)	B	57.9/17.3
R279	7030010040	S.RES ERJ2GEJ-JPW	B	59.3/15.2
R281	7030003860	S.RES ERJ3GE JPW V	B	77.9/12.3
R284	7030005050	S.RES ERJ2GEJ 103 X (10K)	B	31.2/7.5
R285	7030005160	S.RES ERJ2GEJ 105 X (1M)	B	77.9/18.8
R300	7030008010	S.RES ERJ2GEJ 123 X (12K)	B	42.7/37.1
R303	7030005600	S.RES ERJ2GEJ 273 X (27K)	B	45.6/35.4
R304	7030005050	S.RES ERJ2GEJ 103 X (10K)	B	57.3/37.3
R305	7030005240	S.RES ERJ2GEJ 473 X (47K)	B	57.3/38.2
R306	7030005110	S.RES ERJ2GEJ 224 X (220K)	B	46.9/36.8
R307	7030005100	S.RES ERJ2GEJ 154 X (150K)	B	56.9/39.6
R308	7030005050	S.RES ERJ2GEJ 103 X (10K)	B	49.6/40.2
R309	7030012220	S.RES ERJ2GEJ 185 X (1.8M)	B	48.3/35.4
R310	7030004970	S.RES ERJ2GEJ 470 X (47)	B	57.3/36.3
R311	7030005220	S.RES ERJ2GEJ 223 X (22K)	B	50.4/33.4
R312	7030005050	S.RES ERJ2GEJ 103 X (10K)	B	55.8/40.7
R313	7030005220	S.RES ERJ2GEJ 223 X (22K)	B	51.8/33.4
R314	7030005050	S.RES ERJ2GEJ 103 X (10K)	B	54.6/40.2
R315	7030005170	S.RES ERJ2GEJ 474 X (470K)	B	48.3/38.8
R316	7030005600	S.RES ERJ2GEJ 273 X (27K)	B	54.9/33.4
R317	7030005090	S.RES ERJ2GEJ 104 X (100K)	B	51.7/40.6
R318	7030005120	S.RES ERJ2GEJ 102 X (1K)	B	46.9/39.1
R319	7030005050	S.RES ERJ2GEJ 103 X (10K)	B	46.9/38.2
R320	7030007300	S.RES ERJ2GEJ 332 X (3.3K)	B	58.0/33.0
R330	7030005070	S.RES ERJ2GEJ 683 X (68K)	B	64.6/36.0
R331	7030005070	S.RES ERJ2GEJ 683 X (68K)	B	65.5/36.0
R332	7030005070	S.RES ERJ2GEJ 683 X (68K)	B	67.3/36.0
R333	7030005160	S.RES ERJ2GEJ 105 X (1M)	B	63.3/34.6
R334	7030008410	S.RES ERJ2GEJ 392 X (3.9K)	B	66.3/30.6
R335	7030005050	S.RES ERJ2GEJ 103 X (10K)	B	67.6/31.8
R336	7030005060	S.RES ERJ2GEJ 333 X (33K)	B	59.0/36.9
R337	7030005090	S.RES ERJ2GEJ 104 X (100K)	B	68.1/30.6
R338	7030005060	S.RES ERJ2GEJ 333 X (33K)	B	67.6/34.5
R339	7030005050	S.RES ERJ2GEJ 103 X (10K)	B	60.6/36.6
R340	7030007280	S.RES ERJ2GEJ 331 X (330)	B	63.1/32.1
R341	7030005110	S.RES ERJ2GEJ 224 X (220K)	B	65.4/30.6
R342	7030008400	S.RES ERJ2GEJ 182 X (1.8K)	B	67.2/30.6
R343	7030005090	S.RES ERJ2GEJ 104 X (100K)	B	63.1/33.0
R350	7030005090	S.RES ERJ2GEJ 104 X (100K)	B	61.8/30.2
R353	7030008010	S.RES ERJ2GEJ 123 X (12K)	B	60.6/29.9
R354	7030005600	S.RES ERJ2GEJ 273 X (27K)	B	59.7/29.9
R355	7030012220	S.RES ERJ2GEJ 185 X (1.8M)	B	57.0/31.6
R356	7030005090	S.RES ERJ2GEJ 104 X (100K)	B	57.0/29.9
R357	7030005090	S.RES ERJ2GEJ 104 X (100K)	B	58.8/29.9
R358	7030005220	S.RES ERJ2GEJ 223 X (22K)	B	52.8/28.1
R359	7030005220	S.RES ERJ2GEJ 223 X (22K)	B	51.9/28.1
R360	7030005600	S.RES ERJ2GEJ 273 X (27K)	B	50.1/28.1
R361	7030007300	S.RES ERJ2GEJ 332 X (3.3K)	B	47.4/28.1
R370	7030005070	S.RES ERJ2GEJ 683 X (68K)	B	65.3/28.5
R371	7030005070	S.RES ERJ2GEJ 683 X (68K)	B	65.7/27.1
R372	7030005070	S.RES ERJ2GEJ 683 X (68K)	B	65.7/25.3
R373	7030005160	S.RES ERJ2GEJ 105 X (1M)	B	66.5/28.9
R374	7030008410	S.RES ERJ2GEJ 392 X (3.9K)	B	63.2/24.2
R375	7030005050	S.RES ERJ2GEJ 103 X (10K)	B	64.5/23.8
R376	7030005090	S.RES ERJ2GEJ 104 X (100K)	B	63.2/23.3
R377	7030005060	S.RES ERJ2GEJ 333 X (33K)	B	63.9/28.9
R378	7030007280	S.RES ERJ2GEJ 331 X (330)	B	60.3/25.2
R379	7030005110	S.RES ERJ2GEJ 224 X (220K)	B	61.5/25.4
R380	7030008400	S.RES ERJ2GEJ 182 X (1.8K)	B	61.5/28.4
R381	7030005090	S.RES ERJ2GEJ 104 X (100K)	B	60.3/26.1
R382	7030005050	S.RES ERJ2GEJ 103 X (10K)	B	61.8/29.3
R383	7030005090	S.RES ERJ2GEJ 104 X (100K)	B	58.9/28.2
R390	7030005090	S.RES ERJ2GEJ 104 X (100K)	B	61.8/34.3
R391	7030005090	S.RES ERJ2GEJ 104 X (100K)	T	43.9/36.7
R392	7030004980	S.RES ERJ2GEJ 101 X (100)	B	43.5/28.9
R393	7030008410	S.RES ERJ2GEJ 392 X (3.9K)	B	36.3/28.4
R394	7030005050	S.RES ERJ2GEJ 103 X (10K)	B	36.3/30.9
R395	7030005570	S.RES ERJ2GEJ 820 X (82)	T	43.9/30.4
R396	7030005570	S.RES ERJ2GEJ 820 X (82)	T	43.9/29.5
R397	7030005570	S.RES ERJ2GEJ 820 X (82)	T	43.9/18.2
R398	7030005570	S.RES ERJ2GEJ 820 X (82)	T	43.9/19.2
R399	7030004980	S.RES ERJ2GEJ 101 X (100)	B	27.3/46.9
R400	7030005240	S.RES ERJ2GEJ 473 X (47K)	B	48.1/5.1
R401	7030005090	S.RES ERJ2GEJ 104 X (100K)	B	63.7/19.2
R402	7030005090	S.RES ERJ2GEJ 104 X (100K)	B	65.3/19.2
R403	7030005090	S.RES ERJ2GEJ 104 X (100K)	B	75.4/27.6
R404	7030005090	S.RES ERJ2GEJ 104 X (100K)	B	71.2/31.0
R405	7030005090	S.RES ERJ2GEJ 104 X (100K)	B	41.6/11.0
R406	7030005090	S.RES ERJ2GEJ 104 X (100K)	B	41.6/11.9
R407	7030005090	S.RES ERJ2GEJ 104 X (100K)	B	41.6/12.8
R408	7030005090	S.RES ERJ2GEJ 104 X (100K)	B	41.6/15.9
R409	7030005090	S.RES ERJ2GEJ 104 X (100K)	B	46.1/5.1

Eqv.= This component is equivalent to the REF No. component listed above, and may be substituted on parts orders and repairs.

M.=Mounted side (T: Mounted on the Top side, B: Mounted on the Bottom side)
S.=Surface mount

[LOGIC UNIT]

REF NO.	PARTS NO.	DESCRIPTION	M.	H/V LOCATION
R410	7030005090	S.RES ERJ2GEJ 104 X (100K)	B	41.6/14.7
R411	7030005090	S.RES ERJ2GEJ 104 X (100K)	B	47.1/5.1
R412	7030005090	S.RES ERJ2GEJ 104 X (100K)	B	45.2/20.4
R413	7030005090	S.RES ERJ2GEJ 104 X (100K)	B	26.6/31.3
R416	7030005950	S.RES RR0510P-123-D (12K)	B	86.4/12.4
R417	7030005240	S.RES ERJ2GEJ 473 X (47K)	B	30.0/48.1
R418	7030005240	S.RES ERJ2GEJ 473 X (47K)	B	21.6/39.8
R419	7030010040	S.RES ERJ2GEJ-JPW	B	48.3/45.2
C3	4550008370	S.TAN TMCJ1C105MTRF	B	6.6/15.9
C4	4550008370	S.TAN TMCJ1C105MTRF	B	4.1/19.7
C5	4550008370	S.TAN TMCJ1C105MTRF	B	3.8/17.1
C6	4030017440	S.CER C1005 CH 1H 221J-T	B	7.6/16.5
C7	4030017620	S.CER C1005 CH 1H 100C-T	B	60.6/42.9
C11	4550008370	S.TAN TMCJ1C105MTRF	B	6.6/18.7
C13	4030017440	S.CER C1005 CH 1H 221J-T	B	6.5/6.0
C15	4030017440	S.CER C1005 CH 1H 221J-T	B	3.3/29.2
C17	4030017440	S.CER C1005 CH 1H 221J-T	B	5.3/7.3
C18	4030011810	S.CER C1608 JB 1A 224K-T	B	57.8/46.5
C19	4030011810	S.CER C1608 JB 1A 224K-T	B	59.0/46.5
C20	4030011810	S.CER C1608 JB 1A 224K-T	B	58.4/44.3
C21	4030011810	S.CER C1608 JB 1A 224K-T	B	58.4/43.1
C22	4030017620	S.CER C1005 CH 1H 100C-T	B	61.5/48.0
C23	4030017460	S.CER C1005 JB 1H 102K-T	T	75.4/42.2
C27	4030017460	S.CER C1005 JB 1H 102K-T	T	44.0/6.8
C28	4030019120	S.CER GRM188B31E105KA75D	T	12.8/47.9
C29	4030017400	S.CER C1005 CH 1H 220J-T	T	65.2/33.2
C31	4030017760	S.CER C1005 JB 1H 222K-T	B	59.1/22.6
C33	4030017460	S.CER C1005 JB 1H 102K-T	B	9.2/39.2
C35	4030017780	S.CER C1005 JB 1H 472K-T	B	54.6/21.4
C37	4030017730	S.CER C1005 JB 1H 471K-T	B	57.0/4.7
C38	4030017460	S.CER C1005 JB 1H 102K-T	B	9.5/42.9
C39	4030016790	S.CER C1005 JB 1E 103K-T	B	57.9/4.7
C40	4030017460	S.CER C1005 JB 1H 102K-T	B	8.5/28.9
C41	4030017460	S.CER C1005 JB 1H 102K-T	B	9.2/38.3
C43	4030016930	S.CER C1005 JB 1A 104K-T	B	48.8/47.0
C44	4030017460	S.CER C1005 JB 1H 102K-T	B	9.5/43.8
C45	4030020450	S.CER C1005 JB 0J 475M-T	B	9.4/29.1
C46	4030017780	S.CER C1005 JB 1H 472K-T	B	53.7/20.0
C47	4030017780	S.CER C1005 JB 1H 472K-T	B	62.6/17.9
C48	4030016930	S.CER C1005 JB 1A 104K-T	B	31.0/48.1
C49	4030016790	S.CER C1005 JB 1E 103K-T	B	9.0/37.4
C51	4030017780	S.CER C1005 JB 1H 472K-T	T	43.9/21.6
C52	4030017760	S.CER C1005 JB 1H 222K-T	B	46.5/20.0
C53	4030017780	S.CER C1005 JB 1H 472K-T	B	49.4/24.2
C55	4030017730	S.CER C1005 JB 1H 471K-T	B	86.3/15.5
C56	4030017780	S.CER C1005 JB 1H 472K-T	B	49.0/20.0
C58	4030017780	S.CER C1005 JB 1H 472K-T	B	45.7/21.8
C59	4030017780	S.CER C1005 JB 1H 472K-T	B	48.2/21.9
C61	4030017780	S.CER C1005 JB 1H 472K-T	B	50.6/23.4
C62	4030017780	S.CER C1005 JB 1H 472K-T	B	59.5/20.0
C64	4030017460	S.CER C1005 JB 1H 102K-T	B	55.4/20.5
C65	4030016930	S.CER C1005 JB 1A 104K-T	T	21.3/1.9
C67	4030017610	S.CER C1005 CH 1H 090C-T	B	94.0/13.5
C69	4030016930	S.CER C1005 JB 1A 104K-T	B	41.6/8.7
C72	4030017780	S.CER C1005 JB 1H 472K-T	B	54.8/25.0
C74	4030017780	S.CER C1005 JB 1H 472K-T	B	57.4/24.4
C76	4030018860	S.CER C1005 JB 0J 105K-T	B	94.0/10.8
C77	4030017460	S.CER C1005 JB 1H 102K-T	B	30.7/1.3
C78	4030018920	S.CER C1005 JB 1H 392K-T	B	59.5/19.1
C79	4030016790	S.CER C1005 JB 1E 103K-T	B	27.4/1.3
C80	4030017040	S.CER C1005 JB 1A 333K-T	B	58.0/19.5
C81	4030016930	S.CER C1005 JB 1A 104K-T	B	57.9/16.4
C83	4030017390	S.CER C1005 CH 1H 180J-T	B	58.4/15.2
C84	4030017730	S.CER C1005 JB 1H 471K-T	B	56.9/3.0
C85	4030016790	S.CER C1005 JB 1E 103K-T	B	56.0/3.0
C87	4030016790	S.CER C1005 JB 1E 103K-T	B	57.1/9.2
C88	4030016790	S.CER C1005 JB 1E 103K-T	B	58.5/9.6
C89	4030017460	S.CER C1005 JB 1H 102K-T	T	6.1/12.9
C90	4030017460	S.CER C1005 JB 1H 102K-T	T	6.6/7.5
C91	4030016930	S.CER C1005 JB 1A 104K-T	B	52.2/5.1
C94	4030016790	S.CER C1005 JB 1E 103K-T	B	40.0/3.3
C95	4030016930	S.CER C1005 JB 1A 104K-T	B	69.9/22.9
C96	4030017460	S.CER C1005 JB 1H 102K-T	B	71.2/37.7
C97	4030017460	S.CER C1005 JB 1H 102K-T	B	70.3/37.7
C98	4030019120	S.CER GRM188B31E105KA75D	B	76.7/18.7
C99	4030018860	S.CER C1005 JB 0J 105K-T	B	65.7/17.2
C100	4030017460	S.CER C1005 JB 1H 102K-T	B	66.1/37.7
C101	4550007520	S.TAN F931A106MAABMA	B	68.2/18.8
C102	4030017460	S.CER C1005 JB 1H 102K-T	B	58.4/40.6
C103	4030016930	S.CER C1005 JB 1A 104K-T	B	28.7/43.9
C104	4030019560	S.CER GRM21BB31C106KE15L	B	88.0/10.6
C105	4030017770	S.CER C1005 JB 1H 332K-T	B	26.6/45.1
C106	4030019460	S.CER C1608 JB 0J 106M-T	B	77.5/7.3
C107	4030016930	S.CER C1005 JB 1A 104K-T	B	27.0/43.0
C108	4030019120	S.CER GRM188B31E105KA75D	B	29.8/7.3
C109	4030018860	S.CER C1005 JB 0J 105K-T	B	21.1/42.6
C110	4030017660	S.CER C1005 CH 1H 330J-T	B	86.4/10.6
C111	4030019560	S.CER GRM21BB31C106KE15L	B	82.8/6.1
C113	4030018140	S.CER C1005 JB 1H 391K-T	B	41.9/28.0
C114	4030017460	S.CER C1005 JB 1H 102K-T	B	28.5/22.0
C115	4030016930	S.CER C1005 JB 1A 104K-T	B	27.9/20.8
C116	4030019120	S.CER GRM188B31E105KA75D	B	24.4/7.6
C117	4030016930	S.CER C1005 JB 1A 104K-T	B	39.8/32.7
C118	4030017420	S.CER C1005 CH 1H 470J-T	B	32.0/22.8
C120	4030019560	S.CER GRM21BB31C106KE15L	B	82.8/12.0
C121	4030018860	S.CER C1005 JB 0J 105K-T	B	36.0/23.0
C122	4030019460	S.CER C1608 JB 0J 106M-T	B	77.5/10.5
C124	4030016780	S.CER C1005 JB 1E 153K-T	B	39.8/30.9
C125	4030016930	S.CER C1005 JB 1A 104K-T	B	34.7/22.1
C126	4030017460	S.CER C1005 JB 1H 102K-T	B	33.8/22.1
C127	4030016930	S.CER C1005 JB 1A 104K-T	B	28.7/33.6
C128	4030017460	S.CER C1005 JB 1H 102K-T	B	29.8/21.3
C129	4050000240	S.FEE NFM18PC104R1C3D	B	14.5/29.4

[LOGIC UNIT]

REF NO.	PARTS NO.	DESCRIPTION	M.	H/V LOCATION
C132	4030016930	S.CER C1005 JB 1A 104K-T	B	27.1/41.5
C134	4030016930	S.CER C1005 JB 1A 104K-T	B	21.7/7.0
C135	4030016930	S.CER C1005 JB 1A 104K-T	B	14.7/32.4
C138	4550008380	S.TAN TMCJ0J106MTRF	B	20.6/7.5
C140	4550008380	S.TAN TMCJ0J106MTRF	B	14.5/33.4
C141	4030016930	S.CER C1005 JB 1A 104K-T	B	14.7/31.5
C142	4030018110	S.CER C1005 JB 1H 272K-T	B	42.4/26.7
C143	4030017440	S.CER C1005 CH 1H 221J-T	B	27.3/23.2
C144	4030017440	S.CER C1005 CH 1H 221J-T	B	26.4/23.2
C146	4030016930	S.CER C1005 JB 1A 104K-T	B	18.2/15.8
C149	4030019460	S.CER C1608 JB 0J 106M-T	B	24.1/13.9
C151	4030018080	S.CER C1005 JB 1H 182K-T	B	24.4/38.5
C152	4030018140	S.CER C1005 JB 1H 391K-T	B	29.7/32.7
C154	4030017040	S.CER C1005 JB 1A 333K-T	B	43.5/28.0
C155	4030020120	S.CER C1005 JB 0J 225M-T	B	40.9/37.7
C156	4030018860	S.CER C1005 JB 0J 105K-T	B	36.0/23.9
C157	4030018860	S.CER C1005 JB 0J 105K-T	B	35.7/25.7
C158	4030018860	S.CER C1005 JB 0J 105K-T	B	36.6/25.7
C159	4030019560	S.CER GRM21BB31C106KE15L	B	19.5/41.8
C160	4030017040	S.CER C1005 JB 1A 333K-T	B	22.6/38.5
C161	4030017780	S.CER C1005 JB 1H 472K-T	B	20.8/36.8
C162	4030018860	S.CER C1005 JB 0J 105K-T	B	30.9/33.6
C163	4030016940	S.CER C1005 JB 1A 393K-T	B	24.5/33.4
C165	4030017510	S.CER C1005 CH 1H 680J-T	B	27.5/33.0
C166	4030018860	S.CER C1005 JB 0J 105K-T	B	23.6/15.8
C168	4030016930	S.CER C1005 JB 1A 104K-T	B	24.9/18.2
C169	4030017420	S.CER C1005 CH 1H 470J-T	B	27.0/20.0
C171	4030017460	S.CER C1005 JB 1H 102K-T	B	23.6/43.0
C173	4030018860	S.CER C1005 JB 0J 105K-T	B	27.4/36.8
C174	4030018080	S.CER C1005 JB 1H 182K-T	B	25.4/39.2
C176	4030016930	S.CER C1005 JB 1A 104K-T	B	30.9/38.9
C177	4030016790	S.CER C1005 JB 1E 103K-T	B	26.3/39.2
C178	4030018100	S.CER C1005 JB 1H 681K-T	B	39.9/26.7
C180	4030018860	S.CER C1005 JB 0J 105K-T	B	31.3/37.3
C181	4030016930	S.CER C1005 JB 1A 104K-T	B	32.5/16.1
C182	4030018860	S.CER C1005 JB 0J 105K-T	B	36.3/29.3
C183	4030016930	S.CER C1005 JB 1A 104K-T	B	32.0/19.7
C184	4030018860	S.CER C1005 JB 0J 105K-T	B	34.6/32.4
C186	4030017460	S.CER C1005 JB 1H 102K-T	B	32.0/17.3
C187	4030017620	S.CER C1005 CH 1H 100C-T	B	32.5/18.5
C188	4030016930	S.CER C1005 JB 1A 104K-T	B	35.5/33.2
C190	4030016960	S.CER C1005 JB 1E 183K-T	B	32.8/32.7
C191	4030016790	S.CER C1005 JB 1E 103K-T	B	29.3/14.2
C195	4030017420	S.CER C1005 CH 1H 470J-T	B	30.2/14.2
C196	4030018860	S.CER C1005 JB 0J 105K-T	B	31.4/42.4
C197	4030016930	S.CER C1005 JB 1A 104K-T	B	33.5/15.3
C198	4030016930	S.CER C1005 JB 1A 104K-T	B	36.0/19.8
C199	4030016930	S.CER C1005 JB 1A 104K-T	B	31.1/14.2
C200	4030018860	S.CER C1005 JB 0J 105K-T	B	25.4/36.8
C201	4030018860	S.CER C1005 JB 0J 105K-T	B	86.4/45.3
C202	4030018860	S.CER C1005 JB 0J 105K-T	B	87.3/45.3
C203	4030017460	S.CER C1005 JB 1H 102K-T	B	88.2/44.4
C204	4030016950	S.CER C1005 JB 1A 473K-T	B	91.2/34.9
C205	4030016930	S.CER C1005 JB 1A 104K-T	B	17.2/43.6
C206	4550008160	S.TAN F931A226MAA	B	93.4/37.7
C208	4030016930	S.CER C1005 JB 1A 104K-T	B	26.4/46.9
C209	4030017460	S.CER C1005 JB 1H 102K-T	B	28.0/13.8
C210	4030017460	S.CER C1005 JB 1H 102K-T	B	14.7/30.6
C211	4030016930	S.CER C1005 JB 1A 104K-T	B	5.7/11.1
C212	4030017460	S.CER C1005 JB 1H 102K-T	B	39.8/14.5
C213	4030017460	S.CER C1005 JB 1H 102K-T	B	41.6/17.7
C214	4030018860	S.CER C1005 JB 0J 105K-T	B	26.5/1.3
C215	4030018860	S.CER C1005 JB 0J 105K-T	B	16.2/33.0
C216	4030016930	S.CER C1005 JB 1A 104K-T	B	17.1/33.0
C217	4030017780	S.CER C1005 JB 1H 472K-T	B	56.5/16.9
C218	4030017400	S.CER C1005 CH 1H 220J-T	B	16.7/30.8
C219	4030017400	S.CER C1005 CH 1H 220J-T	B	19.6/29.5
C220	4030017400	S.CER C1005 CH 1H 220J-T	B	21.9/30.8
C221	4030017400	S.CER C1005 CH 1H 220J-T	B	21.9/33.5
C222	4030017400	S.CER C1005 CH 1H 220J-T	B	16.9/29.5
C223	4030017400	S.CER C1005 CH 1H 220J-T	B	22.3/29.5
C300	4030017780	S.CER C1005 JB 1H 472K-T	B	45.6/37.2
C301	4030017460	S.CER C1005 JB 1H 102K-T	B	43.6/38.7
C302	4030017460	S.CER C1005 JB 1H 102K-T	B	45.1/41.8
C303	4030018860	S.CER C1005 JB 0J 105K-T	B	44.5/38.7
C304	4030018860	S.CER C1005 JB 0J 105K-T	B	53.0/33.4
C305	4030016930	S.CER C1005 JB 1A 104K-T	B	52.9/40.2
C306	4030018920	S.CER C1005 JB 1H 392K-T	B	46.9/35.9
C307	4030017910	S.CER C1005 JB 1H 152K-T	B	46.9/35.0
C308	4030017460	S.CER C1005 JB 1H 102K-T	B	48.3/41.8
C309	4030017460	S.CER C1005 JB 1H 102K-T	B	45.6/33.5
C310	4030018090	S.CER C1005 JB 1E 822K-T	B	49.4/33.4
C311	4030016940	S.CER C1005 JB 1A 393K-T	B	52.9/41.7
C312	4030017460	S.CER C1005 JB 1H 102K-T	B	57.7/35.1
C313	4030017790	S.CER C1005 JB 1H 682K-T	B	55.9/33.4
C314	4030018080	S.CER C1005 JB 1H 182K-T	B	54.1/41.5
C315	4030018860	S.CER C1005 JB 0J 105K-T	B	56.8/33.4
C316	4030017910	S.CER C1005 JB 1H 152K-T	B	54.0/33.4
C317	4030016790	S.CER C1005 JB 1E 103K-T	B	58.8/33.9
C330	4030016970	S.CER C1005 JB 1E 223K-T	B	66.4/36.0
C331	4030017790	S.CER C1005 JB 1H 682K-T	B	63.3/36.4
C332	4030016930	S.CER C1005 JB 1A 104K-T	B	63.3/35.5
C333	4030017760	S.CER C1005 JB 1H 222K-T	B	67.6/32.7
C334	4030018820	S.CER C1005 JB 1H 561K-T	B	58.7/35.7
C335	4030016790	S.CER C1005 JB 1E 103K-T	B	64.1/30.8
C336	4030017040	S.CER C1005 JB 1A 333K-T	B	69.3/31.0
C337	4030018080	S.CER C1005 JB 1H 182K-T	B	60.0/35.4
C338	4030019460	S.CER C1608 JB 0J 106M-T	B	65.5/34.5
C340	4030021250	S.CER C1005 JB 1A 334K-T	B	61.8/36.1
C350	4030016940	S.CER C1005 JB 1A 393K-T	B	61.8/31.1
C351	4030017780	S.CER C1005 JB 1H 472K-T	B	60.2/31.1
C352	4030017910	S.CER C1005 JB 1H 152K-T	B	58.4/32.0
C353	4030016930	S.CER C1005 JB 1A 104K-T	B	57.9/29.9
C354	4030018920	S.CER C1005 JB 1H 392K-T	B	58.4/31.1
C355	4030017460	S.CER C1005 JB 1H 102K-T	B	49.6/26.3

Eqv.= This component is equivalent to the REF No. component listed above, and may be substituted on parts orders and repairs.

M.=Mounted side (T: Mounted on the Top side, B: Mounted on the Bottom side)
S.=Surface mount

[LOGIC UNIT]

REF NO.	PARTS NO.	DESCRIPTION		M.	H/V LOCATION
C356	4030018090	S.CER	C1005 JB 1E 822K-T	B	52.8/26.3
C357	4030017790	S.CER	C1005 JB 1H 682K-T	B	51.0/28.1
C358	4030016930	S.CER	C1005 JB 1A 104K-T	B	53.8/28.1
C359	4030018860	S.CER	C1005 JB 0J 105K-T	B	44.6/27.1
C360	4030017910	S.CER	C1005 JB 1H 152K-T	B	49.2/28.1
C361	4030017570	S.CER	C1005 CH 1H 040B-T	B	62.4/19.7
C362	4030017570	S.CER	C1005 CH 1H 040B-T	B	65.8/20.5
C363	4030017460	S.CER	C1005 JB 1H 102K-T	B	62.3/22.2
C364	4030017460	S.CER	C1005 JB 1H 102K-T	B	66.5/22.0
C365	4030017570	S.CER	C1005 CH 1H 040B-T	B	60.4/27.4
C366	4030017460	S.CER	C1005 JB 1H 102K-T	B	46.0/32.1
C367	4030018860	S.CER	C1005 JB 0J 105K-T	B	48.3/31.7
C370	4030016970	S.CER	C1005 JB 1E 223K-T	B	65.7/26.2
C371	4030017790	S.CER	C1005 JB 1H 682K-T	B	66.5/28.0
C372	4030016930	S.CER	C1005 JB 1A 104K-T	B	63.9/29.8
C373	4030017760	S.CER	C1005 JB 1H 222K-T	B	65.7/24.4
C374	4030016790	S.CER	C1005 JB 1E 103K-T	B	61.1/24.2
C375	4030017040	S.CER	C1005 JB 1A 333K-T	B	65.7/23.3
C376	4030019460	S.CER	C1608 JB 0J 106M-T	B	63.6/27.9
C377	4030017760	S.CER	C1005 JB 1H 222K-T	B	61.4/23.0
C378	4030017770	S.CER	C1005 JB 1H 332K-T	B	58.9/27.3
C379	4030017720	S.CER	C1005 JB 1H 331K-T	B	57.7/27.7
C390	4030016940	S.CER	C1005 JB 1A 393K-T	B	60.9/34.3
C391	4030017460	S.CER	C1005 JB 1H 102K-T	B	43.6/37.1
C392	4030017460	S.CER	C1005 JB 1H 102K-T	B	44.5/37.1
C393	4030017460	S.CER	C1005 JB 1H 102K-T	T	43.4/32.8
C394	4030017460	S.CER	C1005 JB 1H 102K-T	T	43.9/37.6
C395	4030017460	S.CER	C1005 JB 1H 102K-T	B	39.8/31.8
C396	4030019120	S.CER	GRM188B31E105KA75D	B	77.0/30.1
C397	4030019120	S.CER	GRM188B31E105KA75D	B	72.2/29.8
C398	4030019120	S.CER	GRM188B31E105KA75D	T	78.4/5.3
C399	4030019120	S.CER	GRM188B31E105KA75D	T	78.3/9.1
C400	4030016790	S.CER	C1005 JB 1E 103K-T	B	46.5/28.1
C502	4030017550	S.CER	C1005 CH 1H 1R5B-T	B	89.7/15.4
C503	4030019460	S.CER	C1608 JB 0J 106M-T	T	43.9/14.4
C504	4030019460	S.CER	C1608 JB 0J 106M-T	B	64.6/17.5
C505	4030019460	S.CER	C1608 JB 0J 106M-T	B	57.2/22.1
C506	4030019460	S.CER	C1608 JB 0J 106M-T	B	25.4/1.7
C507	4030019460	S.CER	C1608 JB 0J 106M-T	B	75.3/25.7
C508	4030019460	S.CER	C1608 JB 0J 106M-T	B	69.4/24.3
C509	4030016930	S.CER	C1005 JB 1A 104K-T	B	27.2/17.5
C511	4030017440	S.CER	C1005 CH 1H 221J-T	B	24.4/31.4
C512	4030017440	S.CER	C1005 CH 1H 221J-T	B	24.9/29.2
C513	4030017440	S.CER	C1005 CH 1H 221J-T	B	23.7/27.9
C514	4030017400	S.CER	C1005 CH 1H 220J-T	B	24.9/27.2
C515	4030017440	S.CER	C1005 CH 1H 221J-T	B	15.3/36.8
C516	4030017440	S.CER	C1005 CH 1H 221J-T	B	12.2/37.1
C517	4030016930	S.CER	C1005 JB 1A 104K-T	T	82.3/8.8
C523	4030019460	S.CER	C1608 JB 0J 106M-T	B	6.2/12.1
C524	4030019460	S.CER	C1608 JB 0J 106M-T	B	46.7/44.2
C526	4030018860	S.CER	C1005 JB 0J 105K-T	B	28.4/6.8
C527	4030016790	S.CER	C1005 JB 1E 103K-T	B	79.7/16.1
C529	4030017430	S.CER	C1005 CH 1H 101J-T	B	89.6/34.0
C530	4030017430	S.CER	C1005 CH 1H 101J-T	B	80.0/32.6
C531	4030017440	S.CER	C1005 CH 1H 221J-T	B	10.9/38.5
C532	4030017440	S.CER	C1005 CH 1H 221J-T	B	12.8/26.7
C533	4030017440	S.CER	C1005 CH 1H 221J-T	B	13.7/14.9
C534	4030017440	S.CER	C1005 CH 1H 221J-T	B	7.8/19.4
C535	4030017440	S.CER	C1005 CH 1H 221J-T	B	24.9/19.7
J2	6510028080	S.CON	27FHSY-RSM1-GAN-TB(LF)(SN)	T	4.9/24.8
J3	6510028170	S.CON	SDHL-8BNS-K-363-A0-ETB(HF)	B	67.4/8.3
J4	6510024580	S.CON	HSJ1621-019011	B	67.8/48.2
J5	6510028920	S.CON	AXK6S50647YG	B	81.2/37.0
J271	6510028880	S.CON	04-6238-010-410-800	B	5.2/24.8
DS1	5040003550	S.LED	NSSW208T	T	16.1/48.2
DS2	5040003640	S.LED	HT-193TW5 <KOU>	T	55.5/8.4
DS3	5040003550	S.LED	NSSW208T	T	24.6/48.2
DS4	5040003640	S.LED	HT-193TW5 <KOU>	T	63.8/8.4
DS5	5040003640	S.LED	HT-193TW5 <KOU>	T	55.5/41.2
DS6	5040003640	S.LED	HT-193TW5 <KOU>	T	63.8/41.2
DS7	5040002670	S.LED	CL-165HR/YG	T	1.2/8.8
DS8	5040003640	S.LED	HT-193TW5 <KOU>	T	63.4/30.3
DS9	5040003640	S.LED	HT-193TW5 <KOU>	T	50.5/30.8
DS10	5040003640	S.LED	HT-193TW5 <KOU>	T	50.5/18.9
DS11	5040003640	S.LED	HT-193TW5 <KOU>	T	63.4/19.4
DS12	5040003550	S.LED	NSSW208T	T	33.1/48.2
DS13	5030003660	LCD	M1-1677TFF-4 <TES>		
MC1	7700002850	MIC	EM6022P-65B-G <HOR>		
S1	2260003300	S.SWI	EVQPQHB55	T	68.0/40.5
S2	2260003300	S.SWI	EVQPQHB55	T	59.6/41.2
S3	2260003300	S.SWI	EVQPQHB55	T	64.1/24.8
S4	2260003300	S.SWI	EVQPQHB55	T	59.6/8.4
S5	2260003300	S.SWI	EVQPQHB55	T	57.2/32.3
S6	2260003300	S.SWI	EVQPQHB55	T	57.2/24.8
S7	2260003300	S.SWI	EVQPQHB55	T	57.2/17.4
S8	2260003300	S.SWI	EVQPQHB55	T	68.0/9.1
S9	2260003300	S.SWI	EVQPQHB55	T	51.3/41.2
S10	2260003300	S.SWI	EVQPQHB55	T	50.3/24.8
S11	2260003300	S.SWI	EVQPQHB55	T	51.3/8.4
S12	2250000710	ENC	F082EN7510W-1+C L20FX6 <SLVJ>		
S13	2260003320	S.SWI	SKRTLAE010	B	51.0/2.1
S14	2260003320	S.SWI	SKRTLAE010	B	34.6/2.1
BT1	3020000390	S.LIT	ML414HIV01E	T	86.0/5.4

[LOGIC UNIT]

REF NO.	PARTS NO.	DESCRIPTION		M.	H/V LOCATION
EP1	6910023920	S.BEA	BLM15GA750SN1D	T	75.3/47.5
EP2	6910023920	S.BEA	BLM15GA750SN1D	B	61.1/44.1
EP3	6910023920	S.BEA	BLM15GA750SN1D	B	61.1/46.8
EP5	6910018460	S.BEA	MMZ1005Y102C-T	B	46.9/47.0
EP6	6910021630	S.BEA	BLM18RK102SN1D	B	77.9/5.4
EP9	6910021630	S.BEA	BLM18RK102SN1D	B	22.5/8.4
EP10	6910021630	S.BEA	BLM18RK102SN1D	B	12.6/30.2
EP12	6910016330	S.BEA	MMZ1005S 601CT-S	B	21.2/9.4
EP13	6910016330	S.BEA	MMZ1005S 601CT-S	B	26.9/21.6
EP14	6910021630	S.BEA	BLM18RK102SN1D	B	18.3/13.9
EP19	6910016330	S.BEA	MMZ1005S 601CT-S	B	29.7/15.4
EP20	6910016330	S.BEA	MMZ1005S 601CT-S	B	32.3/14.8
EP22	6910018460	S.BEA	MMZ1005Y102C-T	B	89.6/34.9
EP23	6910018460	S.BEA	MMZ1005Y102C-T	B	81.6/33.0
EP24	6910023920	S.BEA	BLM15GA750SN1D	B	83.4/32.9
EP25	6910018460	S.BEA	MMZ1005Y102C-T	B	12.7/15.6

Eqv.= This component is equivalent to the REF No. component listed above, and may be substituted on parts orders and repairs.

M.=Mounted side (T: Mounted on the Top side, B: Mounted on the Bottom side)
S.=Surface mount

SECTION 7 MECHANICAL PARTS

[CHASSIS PARTS]

REF NO.	ORDER NO.	DESCRIPTION		QTY.
J1	6910015630	2682 ANT CONNECTOR <EIK>		1
SP1	2510001650	K028NA510-13 <OSC>		1
W1	8900014801	OPC-1573-1 (P0.5N10L50)		1
EP1	6910023940	PGS4ER-CX-512		1
MP1	8010022510	3390 CHASSIS		1
MP2	8210028210	3390 FRONT PANEL (A) ASSEMBLY	[EUR]	1
	8210028210	3390 FRONT PANEL (A) ASSEMBLY	[UK]	1
	8210028210	3390 FRONT PANEL (A) ASSEMBLY	[ITR]	1
	8210028200	3390 FRONT PANEL ASSEMBLY	[USA]	1
	8210028200	3390 FRONT PANEL ASSEMBLY	[KOR]	1
	8210028200	3390 FRONT PANEL ASSEMBLY	[EXP]	1
	8210028200	3390 FRONT PANEL ASSEMBLY	[EXP-01]	1
	8210028200	3390 FRONT PANEL ASSEMBLY	[AUS]	1
MP3	8210028020	3390 REAR PANEL		1
MP6	8310080730	3390 WINDOW PLATE		1
MP7	8210028040	3390 REFLECTOR		1
MP8	8930085930	3390 MAIN SEAL		1
MP12	8930076440	3115 VENT SHEET		1
MP13	8930030920	1301 SHEET		1
MP14	8930058550	O-RING (AS)		1
MP15	8930084870	3384 REAR SHEET		1
MP19	8610014360	KNOB N-397		1
MP20	8610014370	KNOB N-398		1
MP21	8930083090	3322 D-BUTTON		1
MP22	8930083070	3322 LENS		1
MP23	8930083140	3322 CONTACT RUBBER (TOT)		1
MP24	8930083881	O-RING (CK)-1 (TOT)		1
MP25	8930083670	O-RING (CL) (TOT)		1
MP26	8930083680	O-RING (CM) (TOT)		1
MP27	8830003670	VR NUT (AC)		1
MP28	8830003660	STEP NUT (M)		1
MP29	8930083700	DOUBLE SIDE TAPE (BM)		1
MP30	8930086950	SPONGE (MD)		1
MP31	8930083810	SPONGE (LJ)		1
MP32	8930083900	INSULATION SHEET (MW)		1
MP33	8930083690	3322 GPS SPONGE		1
MP34	8810010850	PHBT B0 M2X8 SUS SSBC		2
MP35	8810011050	BT M2X3 NI-ZC3		11
MP36	8810011050	BT M2X3 NI-ZC3		6
MP38	8930086021	3322 C-BUTTON (A)-1		1
MP39	8930086030	3390 SD CAP (TOT)		1
MP40	8930086040	3390 JACK CAP (TOT)		1
MP41	8930086050	3322 KEYBOARD (A) <SEP>		1
MP42	8510020580	3390 SHIELD PLATE <KN>		1
MP43	8510020600	3390 DSP CASE <KN>		1
MP44	8930086060	3390 WINDOW SHEET		1
MP45	8930086070	3390 WHITE SHEET		1
MP46	8930086090	DOUBLE SIDE TAPE (BP)		1
MP47	8930086080	3390 MIC SPONGE		1
MP48	8930087760	FERRITE SHEET (AJ)		1
MP49	8930087770	FERRITE SHEET (AK)		1
MP50	8930087220	3390 INSULATION SHEET		1
MP51	8930085100	SHIELD SPONGE (CW)		1
MP52	8930075180	FERRITE SHEET (X)		1
MP53	8930087760	FERRITE SHEET (AJ)		1
MP54	8930088010	3390 LCD PLATE		1
MP55	8930058500	INSULATION SHEET (HB)		1
MP56	8930086090	DOUBLE SIDE TAPE (BP)		1
MP57	8930086090	DOUBLE SIDE TAPE (BP)		1
MP59	8930088200	3390 EARTH PLATE	[EUR]	1
	8930088200	3390 EARTH PLATE	[UK]	1
	8930088200	3390 EARTH PLATE	[ITR]	1
	8930088200	3390 EARTH PLATE	[USA]	1
MP60	8930088240	INSULATION SHEET (NC)	[EUR]	1
	8930088240	INSULATION SHEET (NC)	[UK]	1
	8930088240	INSULATION SHEET (NC)	[ITR]	1
	8930088240	INSULATION SHEET (NC)	[USA]	1

[MAIN UNIT]

REF NO.	ORDER NO.	DESCRIPTION	QTY.
J2*	6450000870	HEC2711-01-020	1
J3*	6510028130	AXK5S50047YG	1
J4*	6510025880	TC38-108-01 <CFE>	1
J5*	6450000131	HSJ1102-018540	1
J450*	6510029520	AXK5F12347YG	1
J451*	6510029520	AXK5F12347YG	1
S2*	2260001900	SW-149 (SKHLLD)	1
EP21*	6910023540	N010M9-01C000CR <CCP>	1
EP22*	6910023540	N010M9-01C000CR <CCP>	1
MP1	8950007850	3322 CONTACT SPRING <CCP>	1
MP8*	8410002610	2888 PA HEATSINK Y835	1
MP9*	8510017841	OG-321610GK	1
MP10*	8510017841	OG-321610GK	1
MP11*	8510017841	OG-321610GK	1
MP12*	8510017841	OG-321610GK	1
MP13*	8510017841	OG-321610GK	1

[VCO1 UNIT]

REF NO.	ORDER NO.	DESCRIPTION	QTY.
J1*	6510029530	AXK6F12347YG	1
MP1	8510020590	3390 VCO CASE <KN>	1

[VCO2 UNIT]

REF NO.	ORDER NO.	DESCRIPTION	QTY.
J1*	6510029530	AXK6F12347YG	1
MP1	8510020590	3390 VCO CASE <KN>	1

[LOGIC UNIT]

REF NO.	ORDER NO.	DESCRIPTION	QTY.
J2*	6510028080	27FHSY-RSM1-GAN-TB (LF) (SN)	1
J3*	6510028170	SDHL-8BNS-K-363-A0-ETB (HF)	1
J4*	6510024580	HSJ1621-019011	1
J5*	6510028920	AXK6S50647YG	1
J271*	6510028880	04-6238-010-410-800	1
DS13	5030003660	M1-1677TFF-4 <TES>	1
MC1*	7700002850	EM6022P-65B-G <HOR>	1
S1*	2260003300	EVQPQHB55	1
S2*	2260003300	EVQPQHB55	1
S3*	2260003300	EVQPQHB55	1
S4*	2260003300	EVQPQHB55	1
S5*	2260003300	EVQPQHB55	1
S6*	2260003300	EVQPQHB55	1
S7*	2260003300	EVQPQHB55	1
S8*	2260003300	EVQPQHB55	1
S9*	2260003300	EVQPQHB55	1
S10*	2260003300	EVQPQHB55	1
S11*	2260003300	EVQPQHB55	1
S12	2250000710	F082EN7510W-1	1
S13*	2260003320	SKRTLAE010	1
S14*	2260003320	SKRTLAE010	1
BT1*	3020000390	ML414HIV01E	1

[ACCESSORIES]

REF NO.	ORDER NO.	DESCRIPTION		QTY.
EP1	6910018620	BLACK HANDY STRAP		1
EP2	3310002150	FA-S270C		1
EP3	(Optional)	BC-167SD	[EUR]	1
	(Optional)	BC-167SD	[ITR]	1
	(Optional)	BC-167SA	[USA]	1
	(Optional)	BC-167SD	[KOR]	1
	(Optional)	BC-167SA	[EXP]	1
	(Optional)	BC-167SD	[EXP-01]	1
	(Optional)	BC-167SV	[AUS]	1
EP4	(Optional)	BP-271		1
MP1	(Optional)	MB-127		1

*: Refer to "**BOARD LAYOUTS**" for the location.
: Refer to "GENERAL WIRING**" for the connection
Screw abbreviations A, B0, BT: Self-tapping PH: Pan head ZK: Black NI-ZU: Nickel-Zinc SUS: Stainless

[ACCESSORIES]

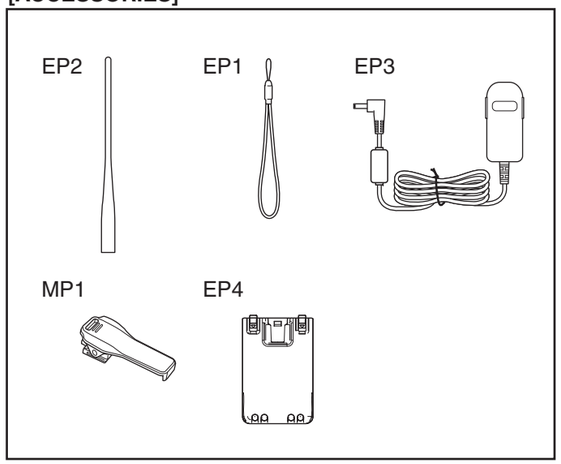

Abbreviations:
(C) : CHASSIS PARTS
(M) : MAIN UNIT
(L) : LOGIC UNIT
(V1) : VCO1 UNIT
(V2) : VCO2 UNIT

The combination of top side and bottom side of this page shows the actual configuration of P.C. board.

• LOGIC UNIT (TOP VIEW)

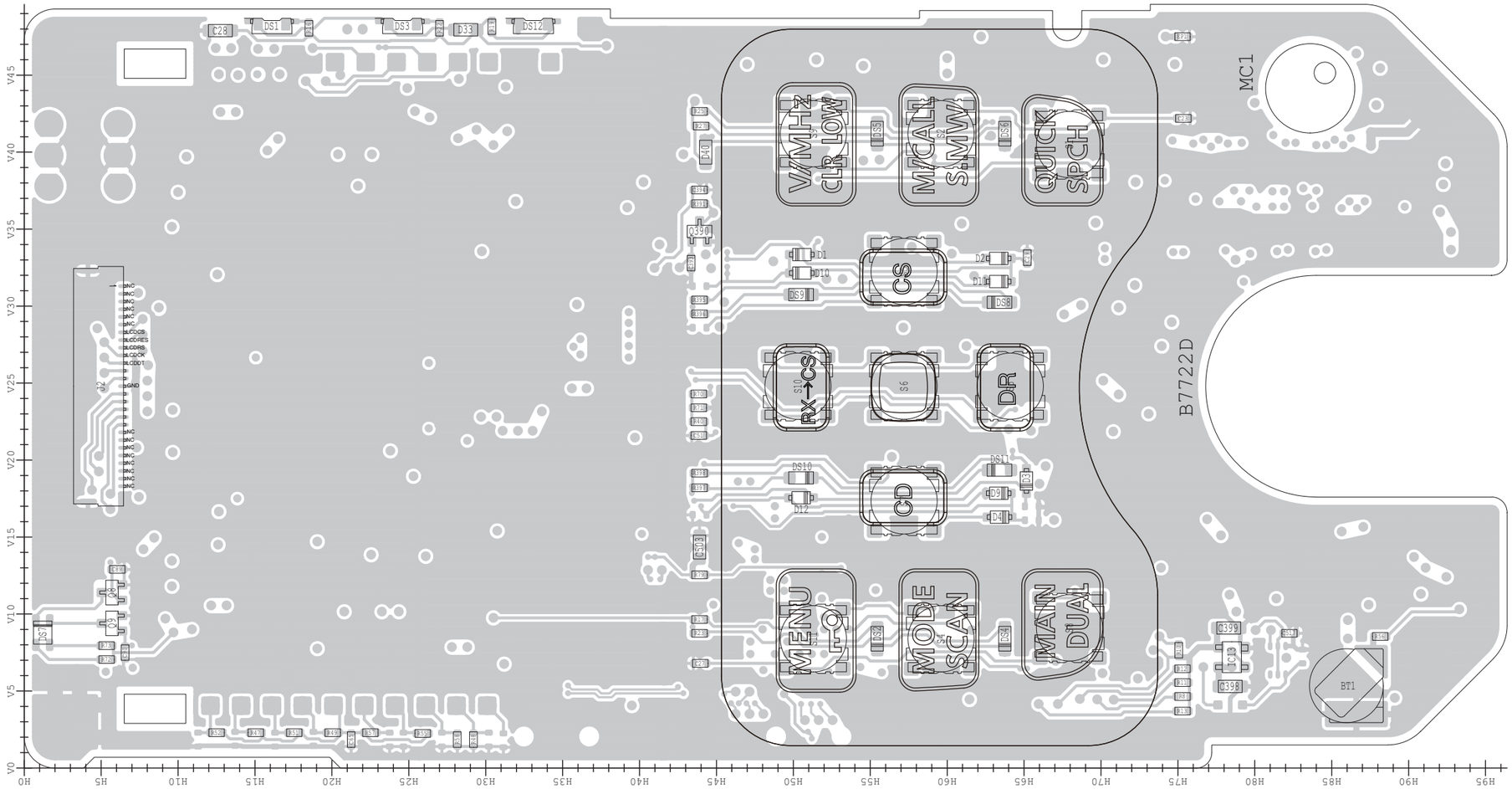

The combination of top side and bottom side of this page shows the actual configuration of P.C. board.

• LOGIC UNIT (BOTTOM VIEW)

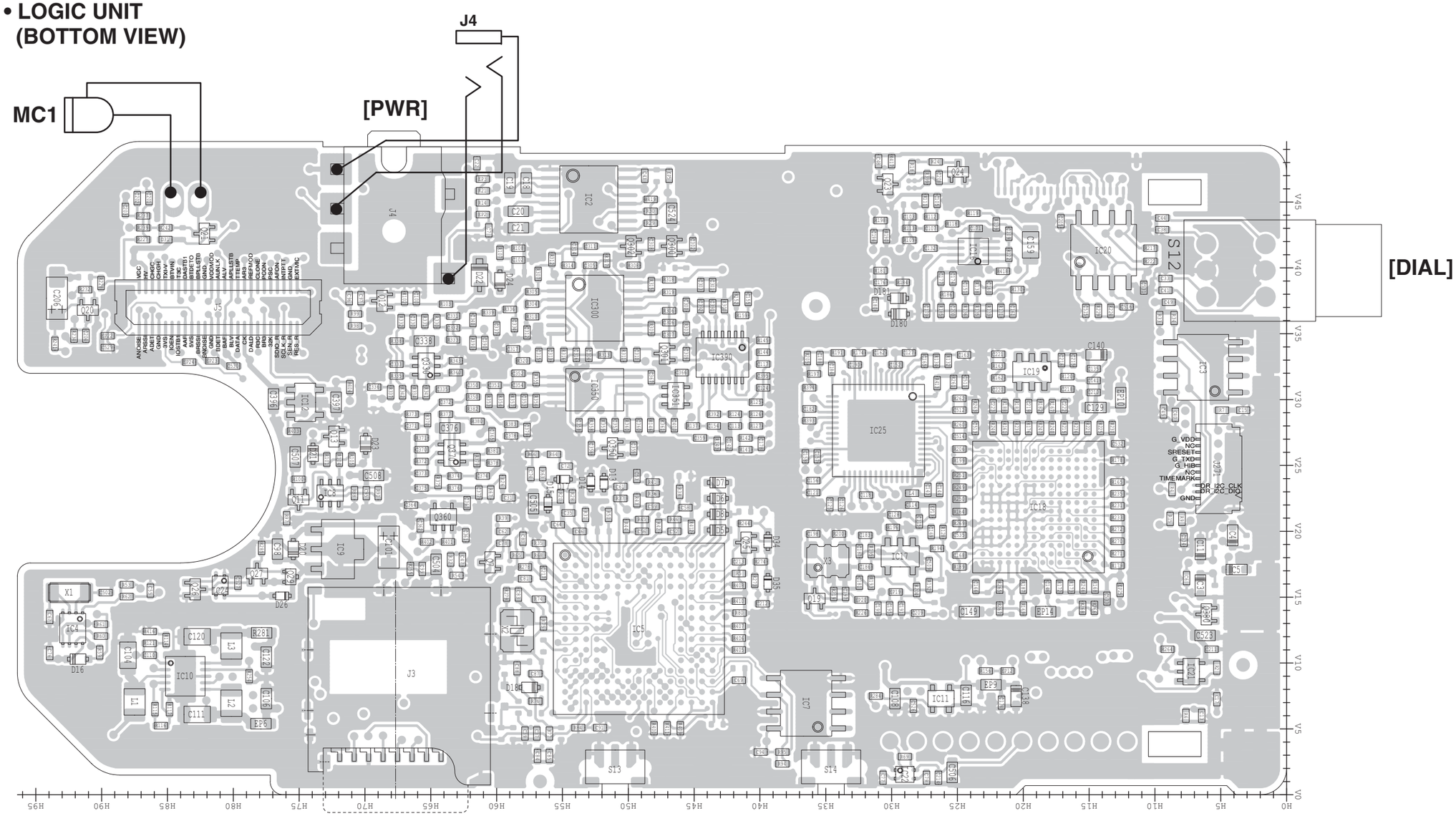

The combination of top side and bottom side of this page shows the actual configuration of P.C. board.

• MAIN UNIT (TOP VIEW)

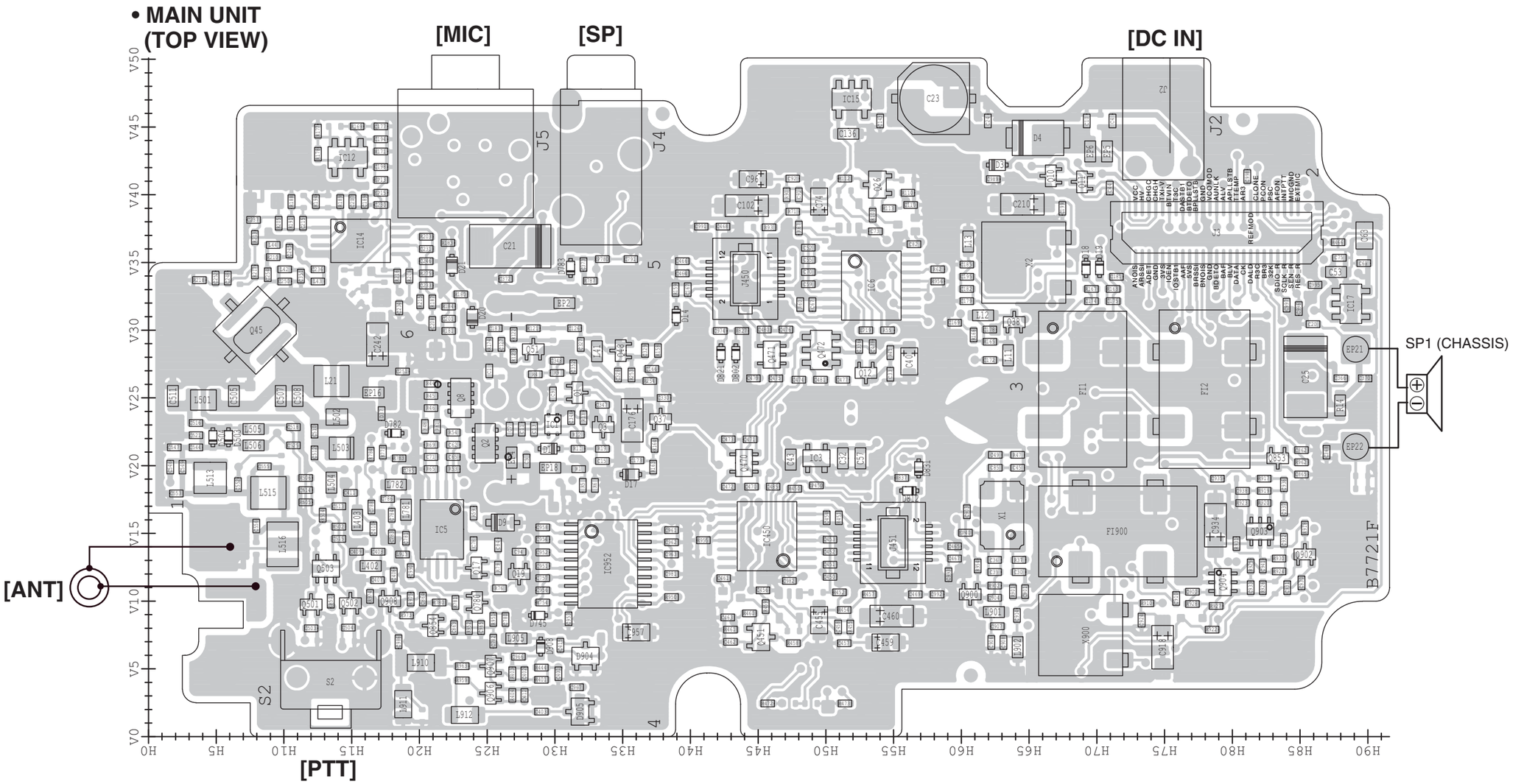

• VCO1 UNIT (TOP VIEW)

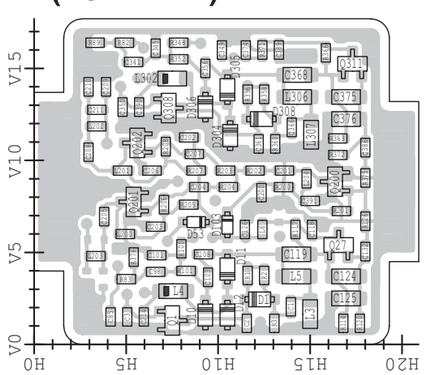

• VCO2 UNIT (TOP VIEW)

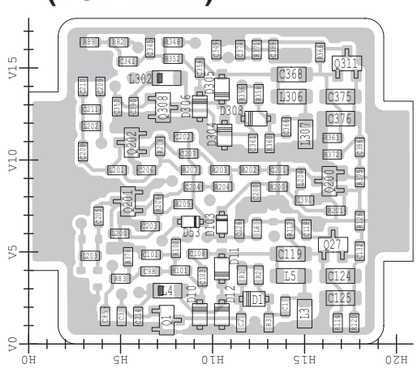

The combination of top side and bottom side of this page shows the actual configuration of P.C. board.

• MAIN UNIT (BOTTOM VIEW)

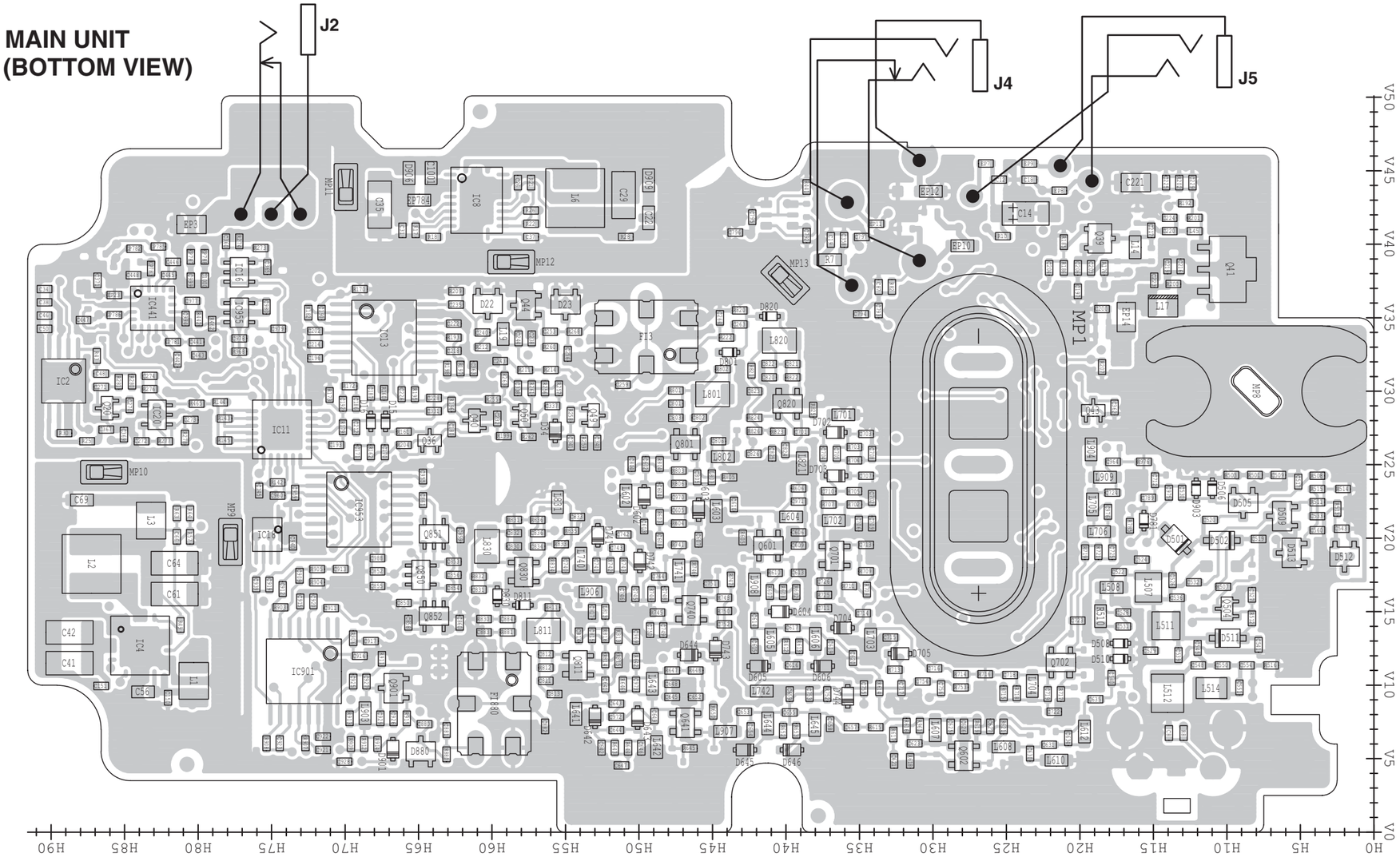

• VCO2 UNIT (BOTTOM VIEW)

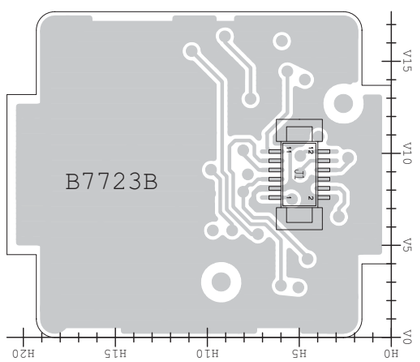

• VCO1 UNIT (BOTTOM VIEW)

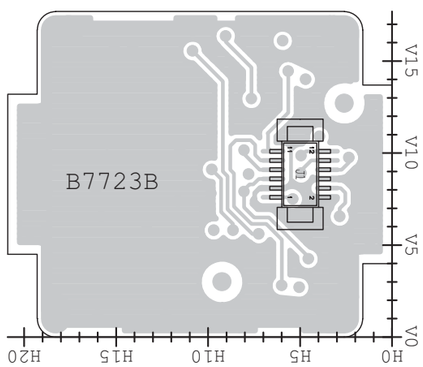

SECTION 10 BLOCK DIAGRAM

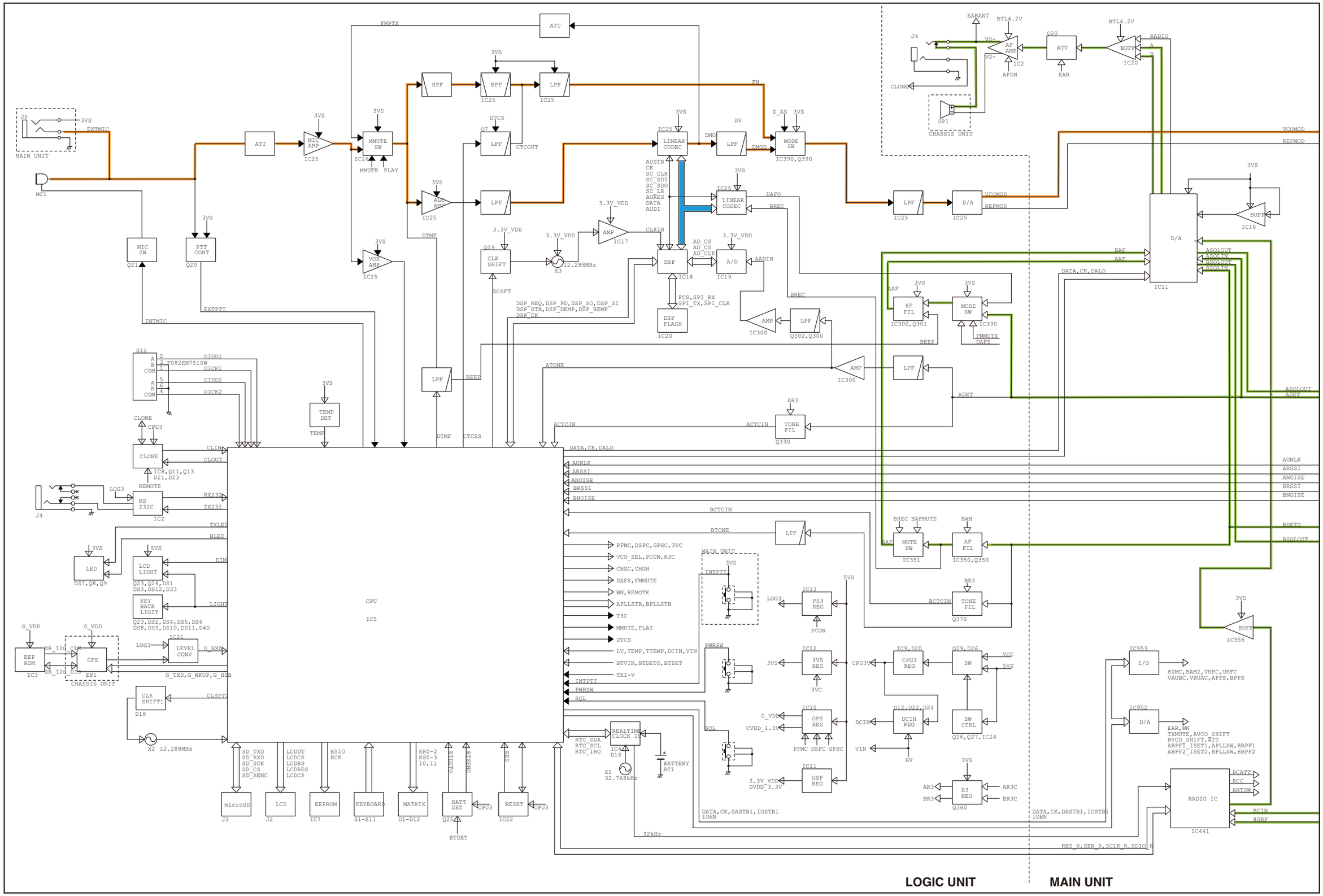

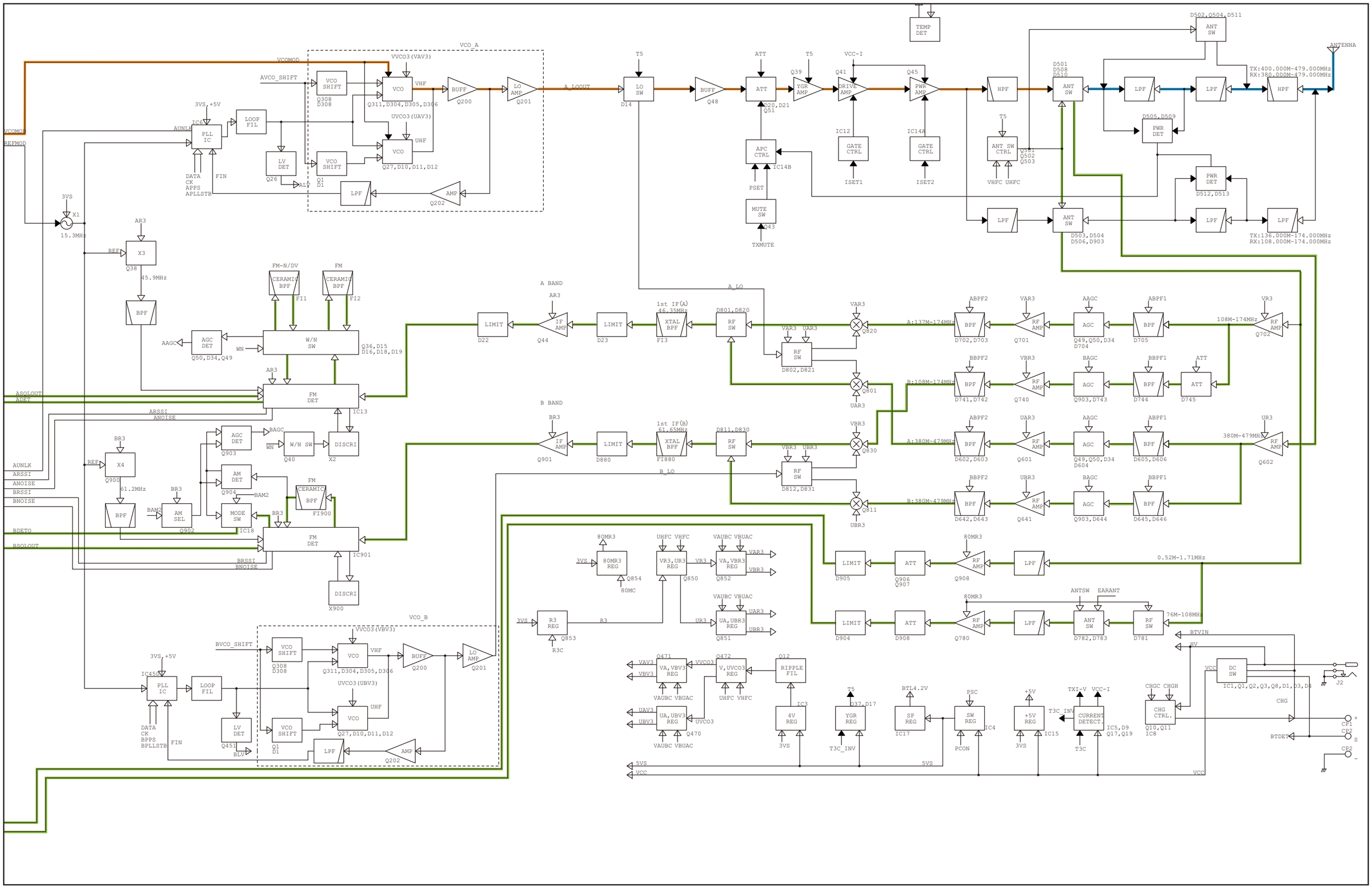
VCO_A
VCO_B
VCOMOD
REFMOD
AVCO_SHIFT
BVCO_SHIFT
VCO SHIFT
VCO
BUFF
LO AMP
LOOP FIL
PLL IC
LV DET
LPF
AMP
A_LOOUT
LO SW
ATT
YGR AMP
DRIVE AMP
PWR AMP
APC CTRL
MUTE SW
GATE CTRL
ANT SW CTRL
HPF
ANT SW
PWR DET
TEMP DET
ANTENNA
TX:400.000M~479.000MHz
RX:380.000M~479.000MHz
TX:136.000M~174.000MHz
RX:108.000M~174.000MHz
X1
15.3MHz
X3
45.9MHz
BPF
AGC DET
W/N SW
FM DET
CERAMIC BPF
A BAND
B BAND
LIMIT
IF AMP
XTAL BPF
RF SW
RF AMP
AGC
ASOLOUT
ADET
ARSSI
ANOISE
AUNLK
BRSSI
BNOISE
BDETO
BSOLOUT
X4
61.2MHz
AM DET
AM SEL
MODE SW
DISCRI
X2
X900
A:137M-174MHz
B:108M-174MHz
A:380M-479MHz
B:380M-479MHz
108M-174MHz
380M-479MHz
0.52M-1.71MHz
76M-108MHz
80MR3 REG
VR3,UR3 REG
VA,VBR3 REG
UA,UBR3 REG
R3 REG
ANT SW
RF SW
RIPPLE FIL
4V REG
YGR REG
SP REG
SW REG
+5V REG
CURRENT DETECT.
CHG CTRL.
DC SW
BTVIN
HV
VCC
5VS
J2
CHG
BTDET
CP1
CP2
S

SECTION 11 VOLTAGE DIAGRAM

• LOGIC UNIT (1/3)

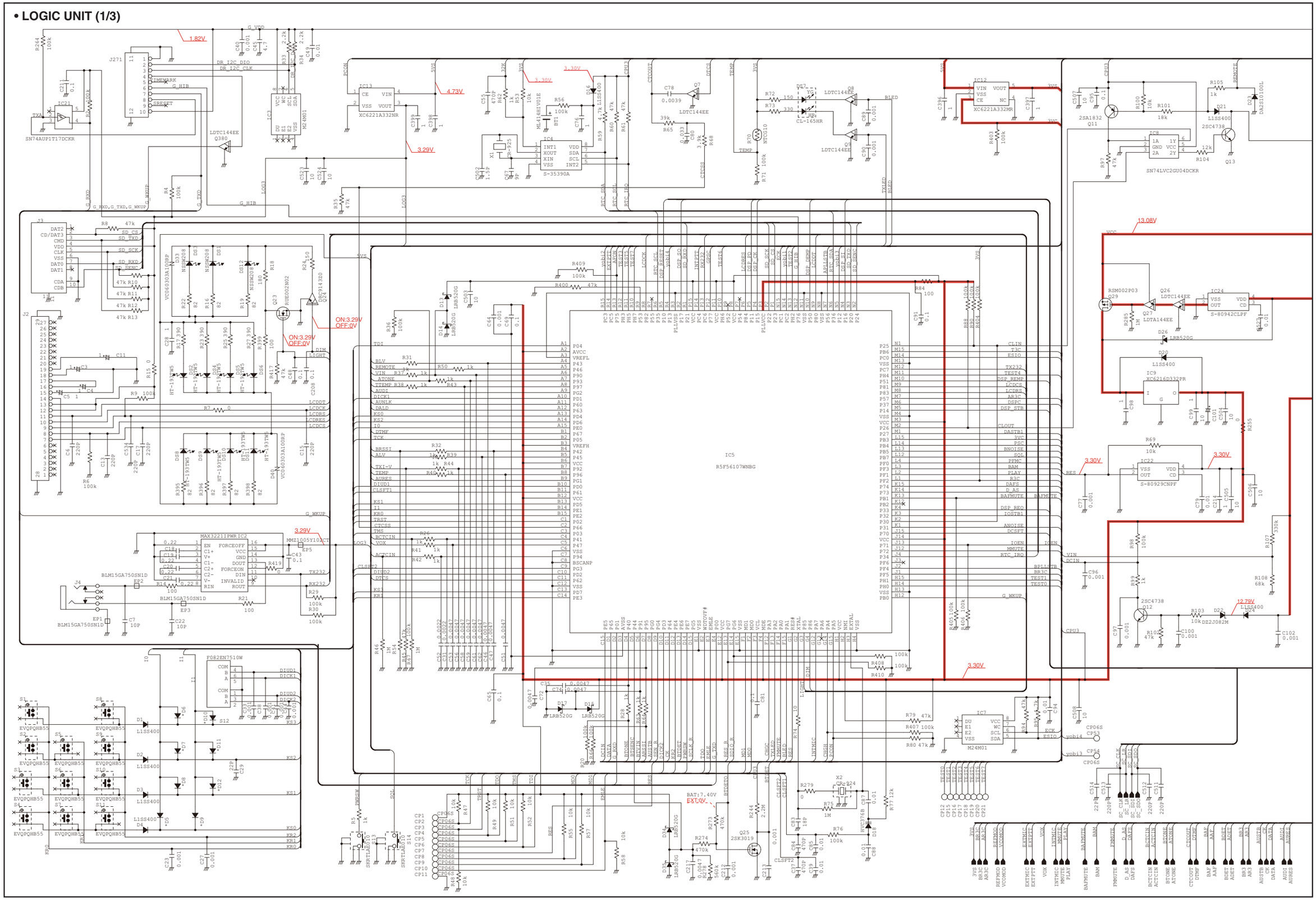

• LOGIC UNIT (2/3)

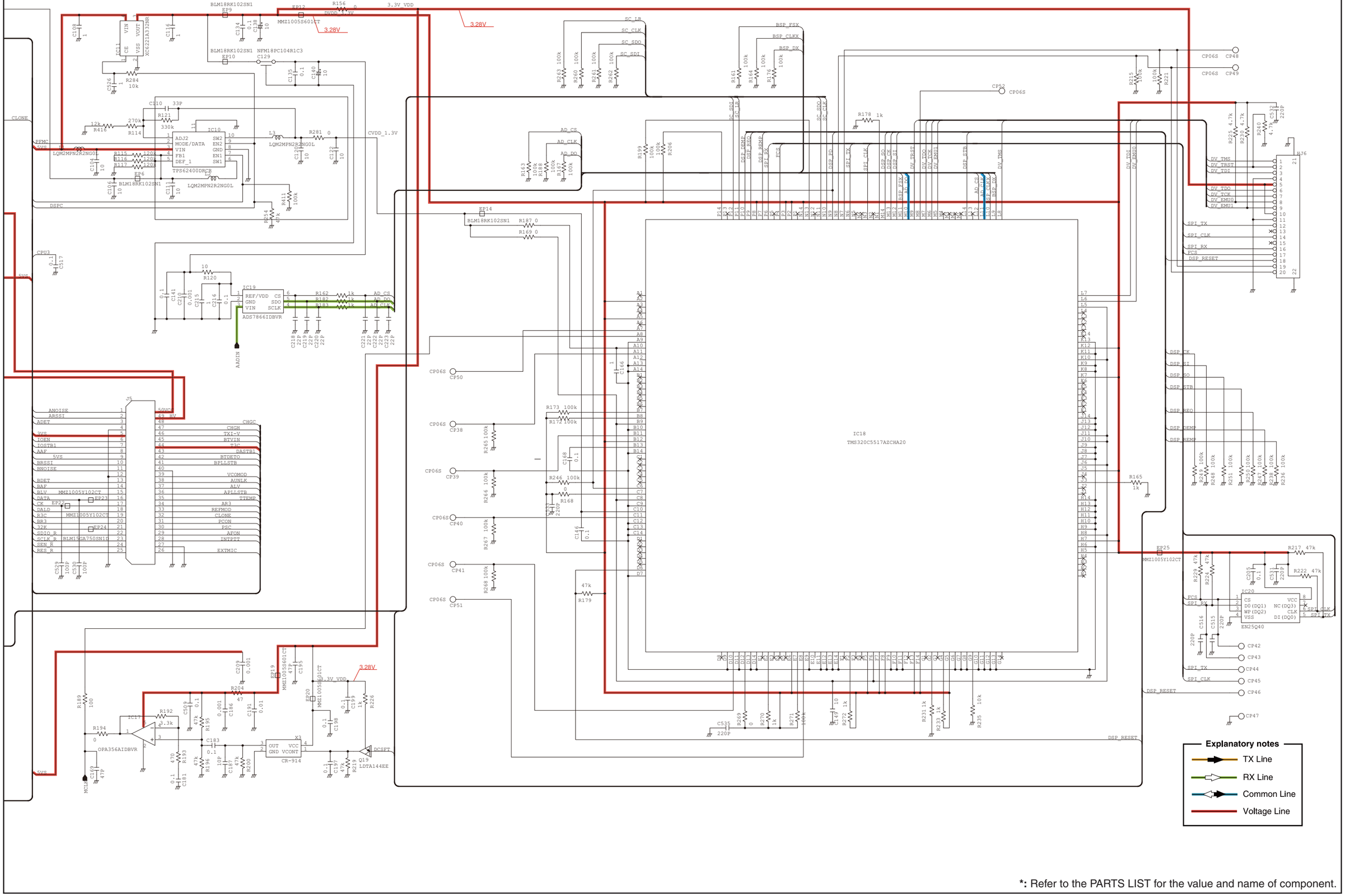

*: Refer to the PARTS LIST for the value and name of component.

• LOGIC UNIT (3/3)

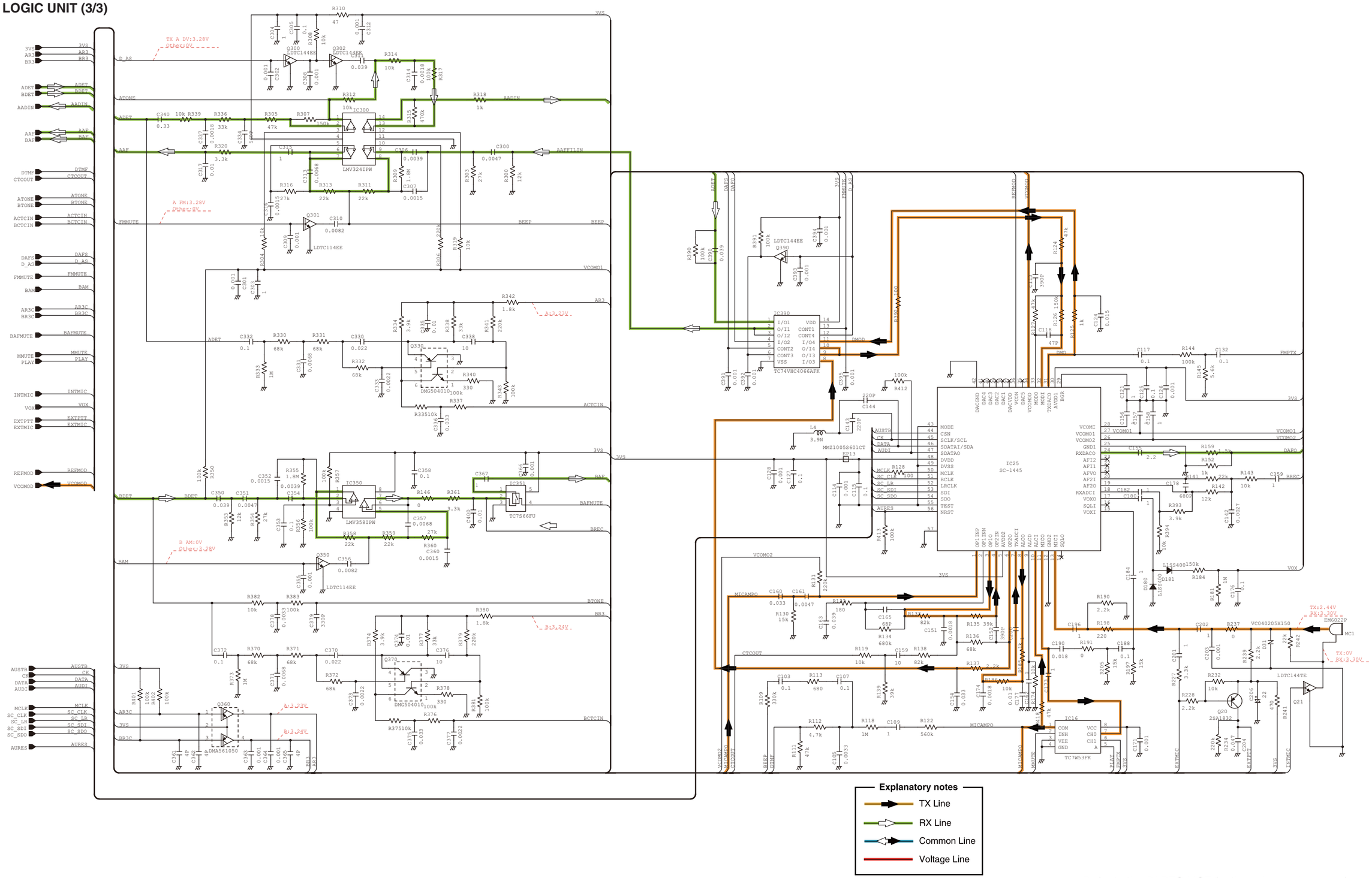

***:** Refer to the PARTS LIST for the value and name of component.

• MAIN UNIT (1/3)

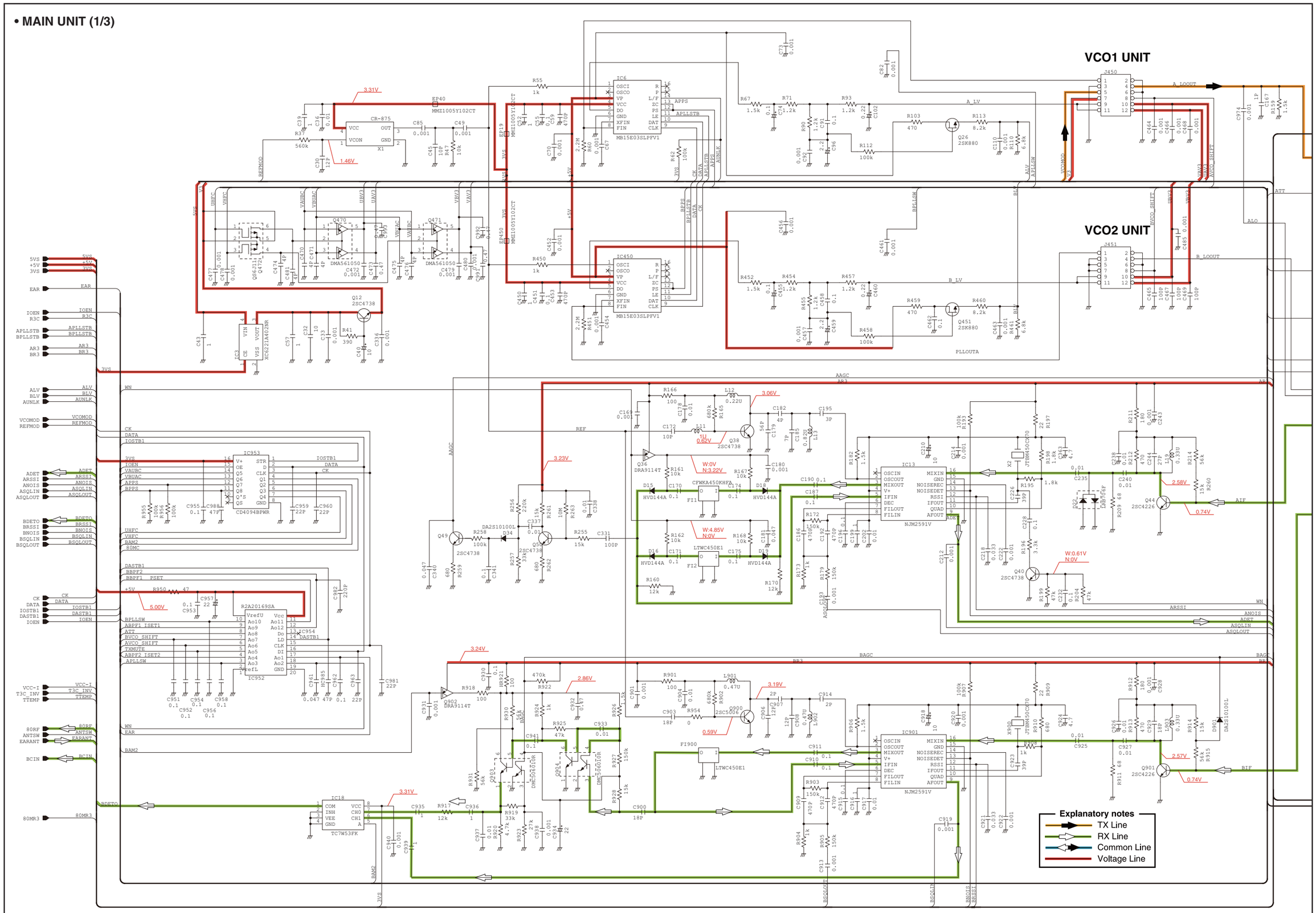

*: Refer to the PARTS LIST for the value and name of component.

• MAIN UNIT (2/3)

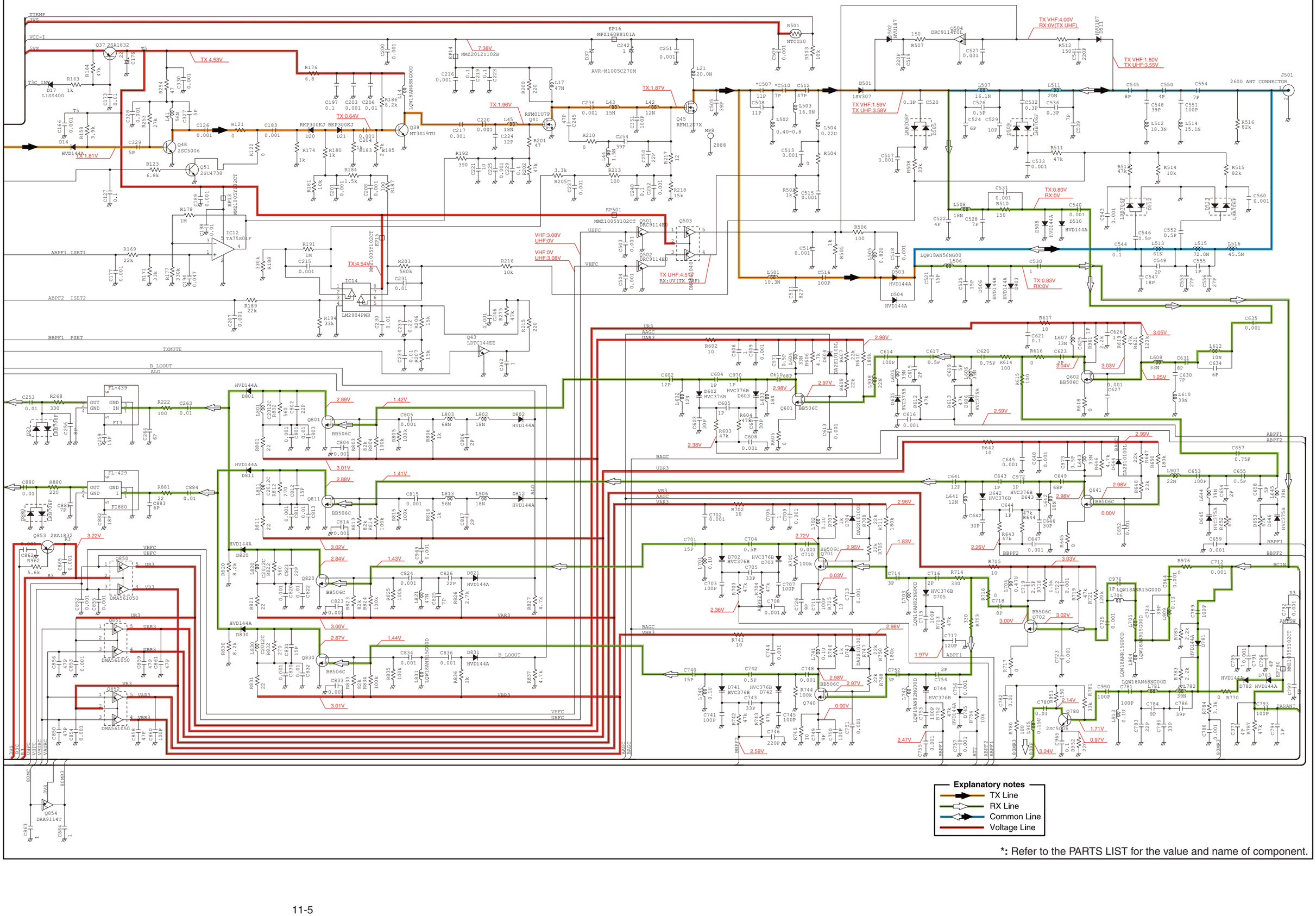

*: Refer to the PARTS LIST for the value and name of component.

• MAIN UNIT (3/3)

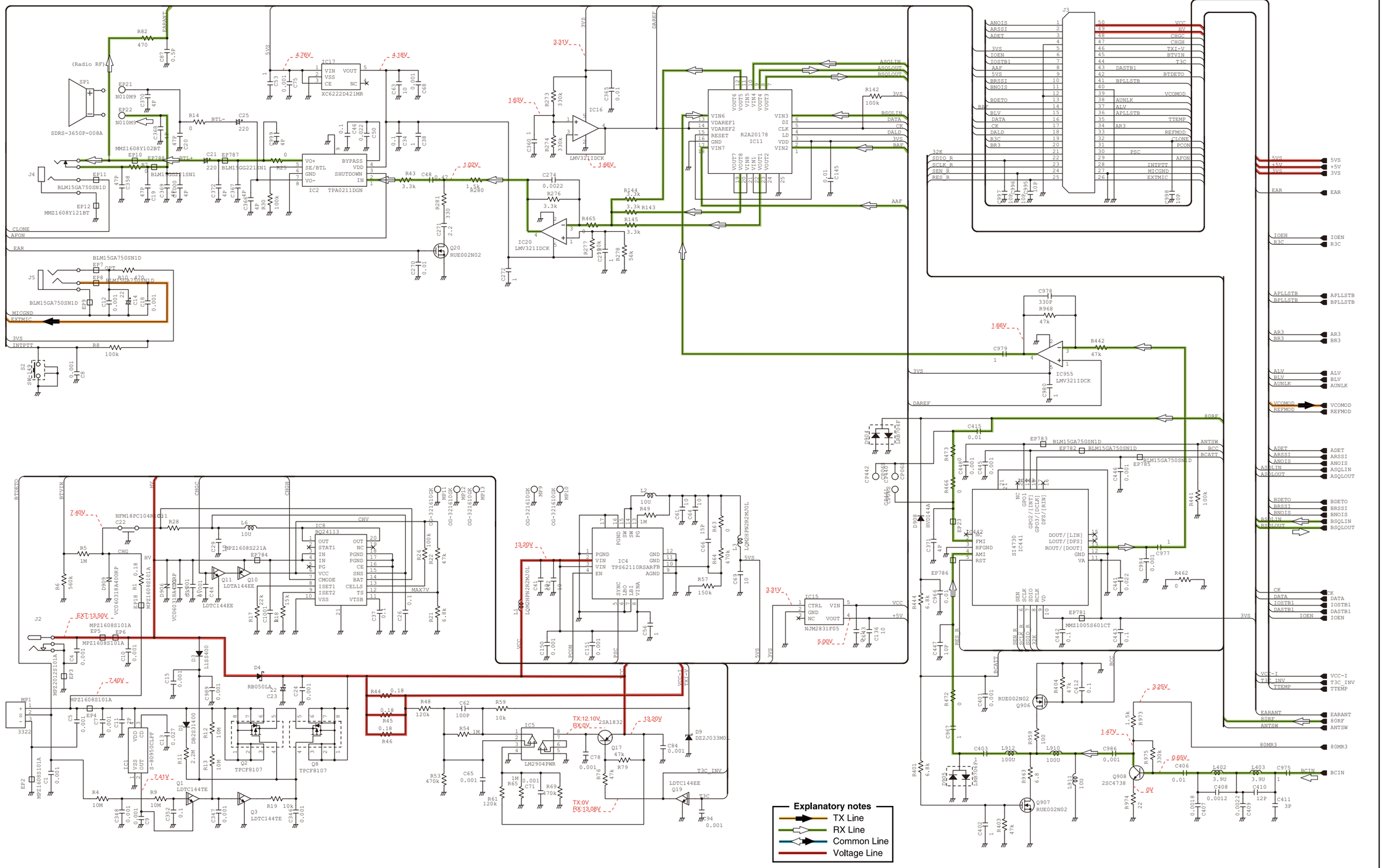

*: Refer to the PARTS LIST for the value and name of component.

• VCO1 UNIT

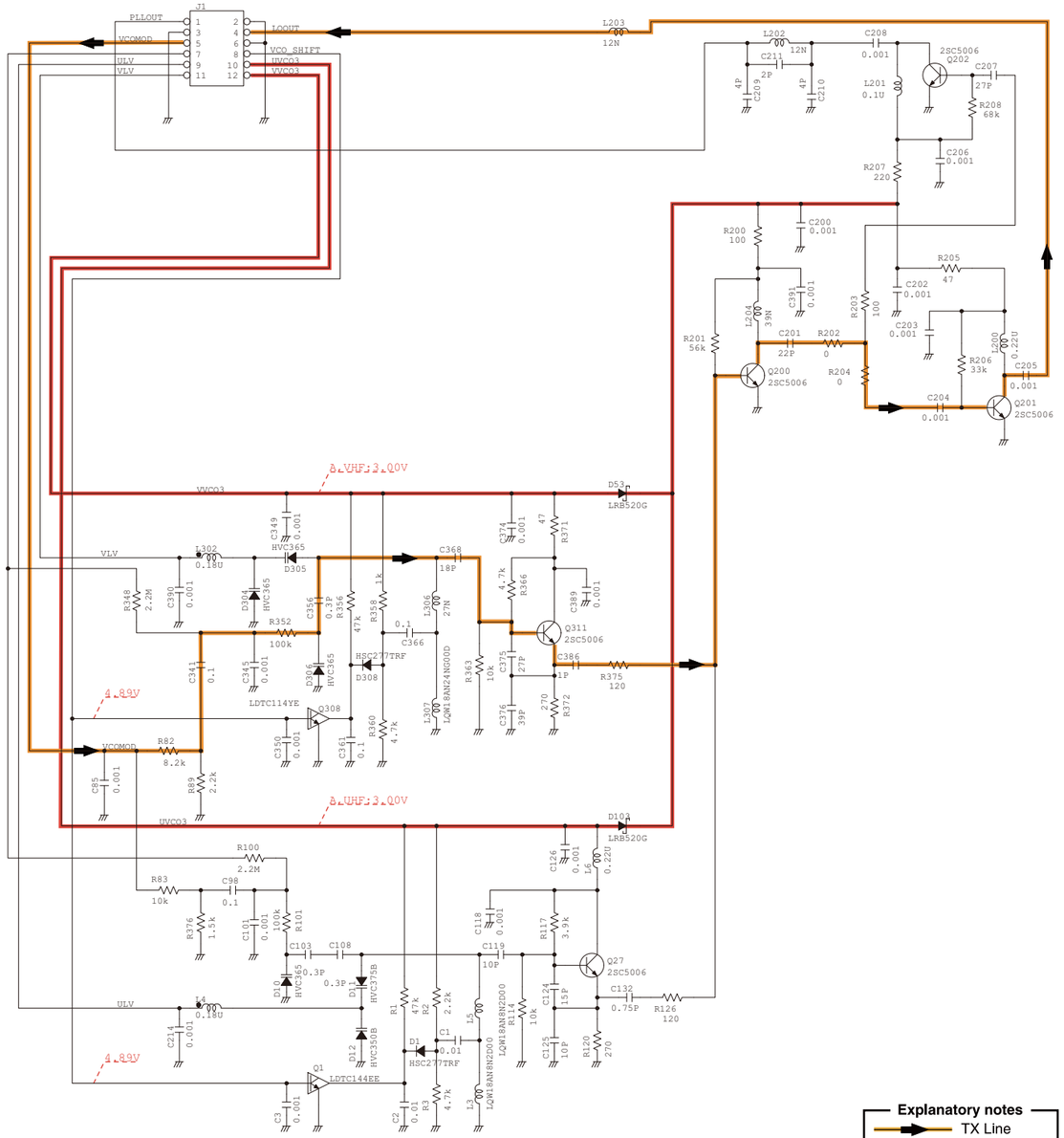

*: Refer to the PARTS LIST for the value and name of component.

• VCO2 UNIT

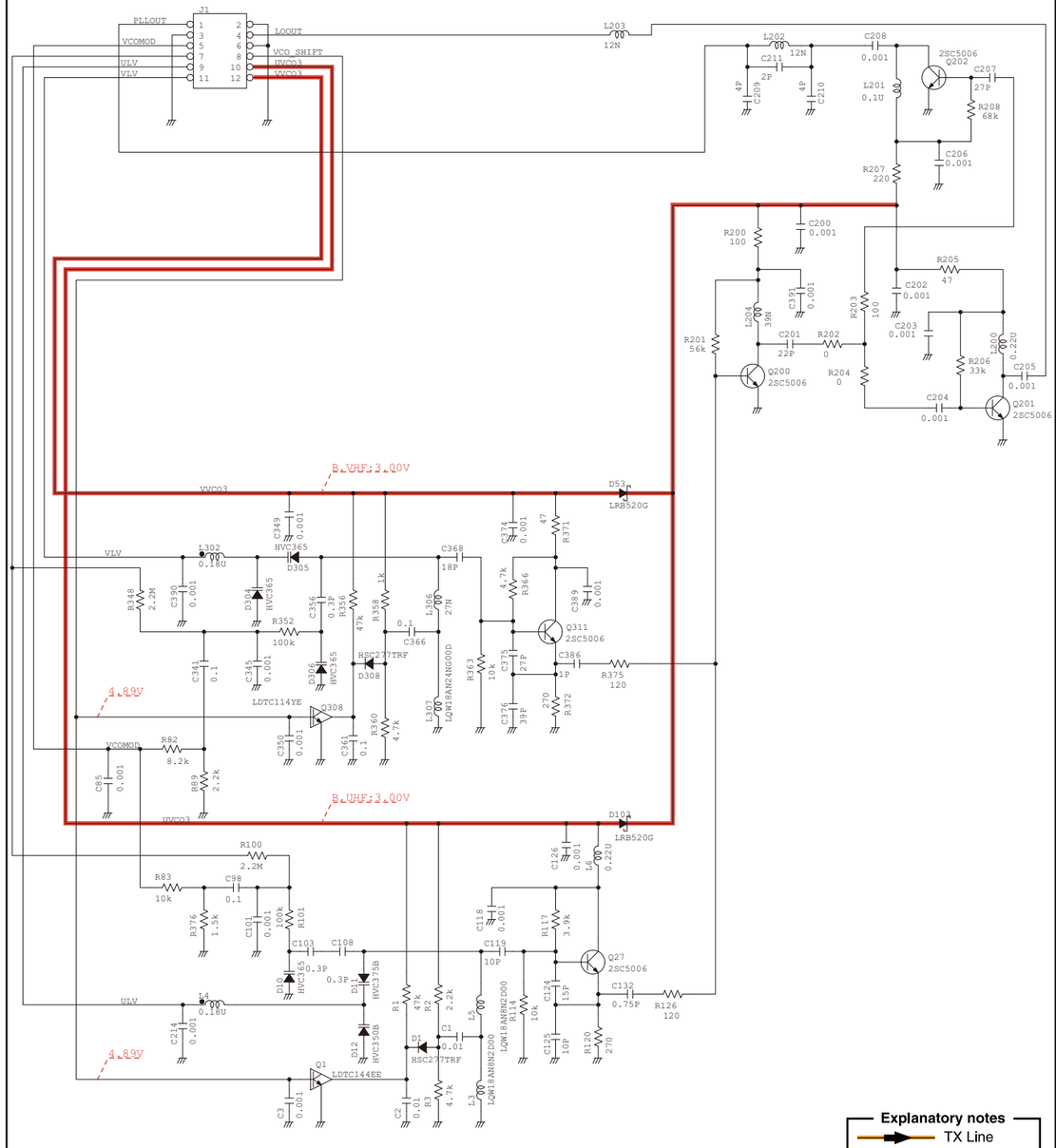

*: Refer to the PARTS LIST for the value and name of component.

Icom Inc.

1-1-32, Kamiminami, Hirano-ku, Osaka 547-0003, Japan
Phone : +81 (06) 6793 5302
Fax : +81 (06) 6793 0013
URL : http://www.icom.co.jp/world/index.html

Icom America Inc.

<Corporate Headquarters>
12421 Willows Road NE, Kirkland, WA 98034, U.S.A.
Phone : +1 (425) 454-8155 Fax : +1 (425) 454-1509
URL : http://www.icomamerica.com
E-mail : sales@icomamerica.com
<Customer Service>
Phone : +1 (425) 454-7619

Icom Canada

Glenwood Centre #150-6165
Highway 17A Delta,B.C., V4K 5B8, Canada
Phone : +1 (604) 952-4266 Fax : +1 (604) 952-0090
URL : http://www.icomcanada.com
E-mail : info@icomcanada.com

Icom (Australia) Pty. Ltd.

Unit 1 / 103 Garden Road, Clayton VIC 3168 Australia
Phone : +61 (03) 9549-7500 Fax : +61 (03) 9549-7505
URL : http://www.icom.net.au
E-mail : sales@icom.net.au

Icom New Zealand

39C Rennie Drive, Airport Oaks,
Auckland, New Zealand
Phone : +64 (09) 274 4062 Fax : +64 (09) 274 4708
URL : http://www.icom.co.nz
E-mail : inquiries@icom.co.nz

Shanghai Icom Ltd.

No.101, Building 9, Caifuxingyuan Park, No.188 Maoting Road,
Chedun Town, Songjiang District, Shanghai, 201611, China
Phone : +86 (021) 6153 2768
Fax : +86 (021) 5765 9987

Icom Brazil

Rua Itororó, 444 Padre Eustáquio Belo Horizonte MG,
CEP: 30720-450 Brazil
Phone : +55 (31) 3582 8847 Fax : +55 (31) 3582 8987
E-mail : sales@icombrazil.com

Icom (Europe) GmbH

Communication Equipment
Auf der Krautweide 24
65812 Bad Soden am Taunus, Germany
Phone : +49 (6196) 76685-0 Fax : +49 (6196) 76685-50
URL : http://www.icomeurope.com
E-mail : info@icomeurope.com

Icom Spain S.L

Ctra. Rubi, No. 88 Bajos A 08174, Sant Cugat del Valles, Barcelona, Spain
Phone : +34 (93) 590 26 70 Fax : +34 (93) 589 04 46
URL : http://www.icomspain.com
E-mail : icom@icomspain.com

Icom (UK) Ltd.

Blacksole House, Altira Park, Herne Bay, Kent CT6 6GZ, UK
Phone : +44 (0) 1227 741741 Fax : +44 (0) 1227 741742
URL : http://www.icomuk.co.uk
E-mail : info@icomuk.co.uk

Icom France s.a.s.

Zac de la Plaine
1 Rue Brindejonc des Moulinais BP 5804
31505 Toulouse Cedex, France
Phone : +33 (5) 61 36 03 03 Fax : +33 (5) 61 36 03 00
URL : http://www.icom-france.com
E-mail : icom@icom-france.com

Asia Icom Inc.

6F No.68, Sec. 1 Cheng-Teh Road, Taipei, Taiwan, R.O.C.
Phone : +886 (02) 2559 1899 Fax : +886 (02) 2559 1874
URL : http://www.asia-icom.com
E-mail : sales@asia-icom.com

Count on us!

Icom Inc.
1-1-32, Kamiminami, Hirano-ku, Osaka 547-0003, Japan

S-14914XZ-C1
© 2013 Icom Inc.